

HDLRS3(RS3) Semiconductor Device Fuse used for Protection

1. General

HDLRS3(RS3)series fuse with rated voltage AC (50Hz/60Hz) t0 750V rated current to 1000A semiconductor device and its full set equipment of short-circuit protection. Standard in compliance: GB 13539,IEC 60269.

2. Type designation

HDL RS 3-□/□

- Rated current of the fuse-link (A)
- Rated current of the fuse (A)
- Design code "3" for protection of silicon rectifier components
- Fuse used for protection of semiconductor device
- Company code

3. Technical data

Rated current	Rated current of the fuse(A)	Rated current of the fuse link(A)	The maximum rated current wasted power of the fuse-link		Rated sectional competence	Note
			50%IN	100%IN		
			HDLRS0	HDLRS0		
250	50	10,15,20,25,30,40,50	2.9	15	50	
	100	50,60,80,100	6.7	35		
	200	100,125,150,160,180,200	9.6	50		
	400	150,200,250,300,350,400	13.5	75		
	600	300,315,350,480,500,600	17.3	100		
500	50	10,15,20,25,30,40,50	3.5	20		
	100	20,30,40,50,63,80,100	8	50		
	200	100,125,150,160,180,200	12	70		
	400	150,200,250,300,350,400	20	92		
	600	300,315,350,480,500,600	43	115		
	1200	700,750,800,1000,1200	60	200		

Note: structure of 750 V structural container and its technical parameter is corresponding to that of in 500V

4. Schematic diagram

⩽50A

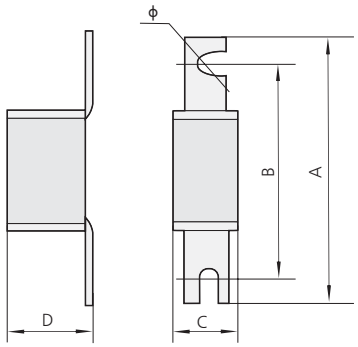

⩾50A

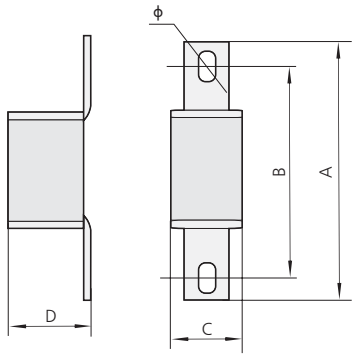

Model	Rated voltage(V)	Rated current(A)	Size				
			a	b	c	d	ϕ
HDLRS3-50	250	15,20,25,30,40,50	115±2.0	100±1.0	25±0.5	45±0.5	7
HDLRS3-50	500	15,20,25,30,40,50	135±2.0	120±1.5	25±0.5	45±0.5	7.5
HDLRS3-100	250	50,60,80,100	120±1.5	100±1.0	40±1.0	42.5±1.0	7×10.5
HDLRS3-100	500	50,60,80,100	140±2.0	120±1.5	40±1.0	42.5±1.0	7×10.5
HDLRS3-200	250	120,125,150,180,200	125±1.5	100±1.0	46±1.0	50±1.0	9×13.5
HDLRS3-200	500	120,125,150,180,200	145±2.0	120±1.5	46±1.0	50±1.0	9×13.5
HDLRS3-400	250	200,250,300,320,350,400	130±1.5	100±1.0	55±1.0	61±1.0	9×13.5
HDLRS3-400	500	200,250,300,320,350,400	150±1.5	120±1.5	55±1.0	61±1.0	9×13.5
HDLRS3-600	250	450,480,500,600	135±1.5	100±1.0	66±1.0	72.5±1.0	13×19.5
HDLRS3-600	500	450,480,500,600	157±2.0	120±1.5	66±1.0	72.5±1.0	13×19.5
HDLRS3-1000	500	700,750,800,1000,1200	173±2.5	135±1.0	86±1.0	93±1.0	17

5. Ordering information

5.1 When ordering, you must specify:
Fuse link shall refer product model, rated current and quantity.
5.2 Ordering example:
For example: HDLRS3-400/300A 100 pieces; it means that order 100 fuse links (the product model: HDLRS3-400 and rated current: 300A.