Type 947C Polypropylene, DC Link Capacitors

High Current, High Capacitance for Inverter Applications



Type 947C series uses the most advanced metallized film technology for long life, high reliability in DC Link applications. This series delivers high capacitance, high voltage and high ripple current handling capabilities required for inverters used in wind, solar, fuel cell applications and more.

Highlights

- Non-polar dielectric
- Dry, resin filled
- High reliability and life expectancy
- Replacement for aluminum electrolytic capacitors (lower capacitance, higher current)
- High current to 100 Amps
- Low ESR
- Low Inductance

Specifications

Capacitance Range	110 µF to 1500 µF
Capacitance Tolerance	±10% standard, ±5% optional
Rated Voltage	800 Vdc, 900Vdc, 1000 Vdc, 1100 Vdc, 1200 Vdc, 1300 Vdc
Operating Temperature Range	-40 ºC to 85 ºC (ambient)
Maximum rms Current	see data tables
Maximum rms Voltage	230 Vac
Test Voltage between Terminals @ 25ºC	150% rated DC voltage for 10 s
Test Voltage between Terminals & Case @ 25ºC	4 kVac @ 50/60 Hz for 60 s
Life Test	5000 h @ 85 ºC, rated voltage
Life Expectancy	200,000 h @ 60 ºC
Reliability	100 FIT typical (medium size capacitor)
Standards	IEC 61071-I, IEC 61881
RoHS Compliant	

Construction Details	
Case Material	Aluminum with Black PVC Sleeve
Resin Material	Dry Resin UL94V-0
Terminal Material	Tin Plated Brass

Dimensions

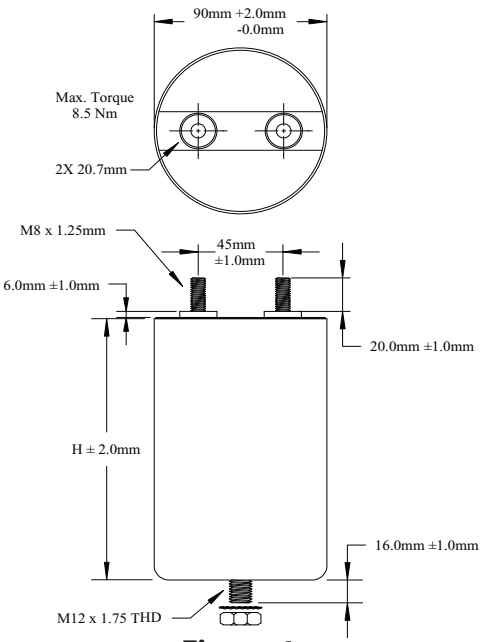

Figure 1

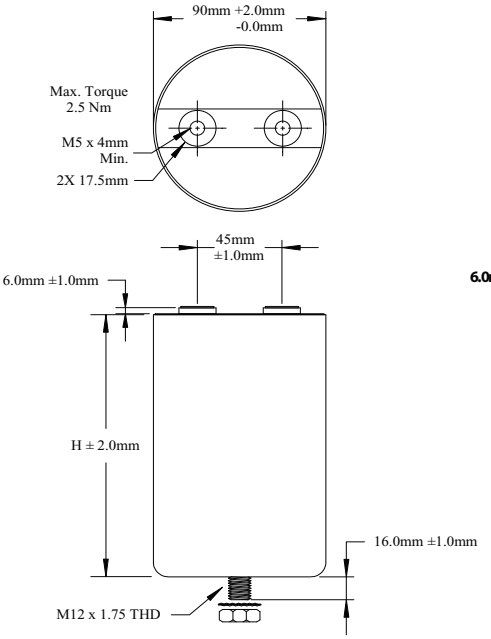

Figure 2

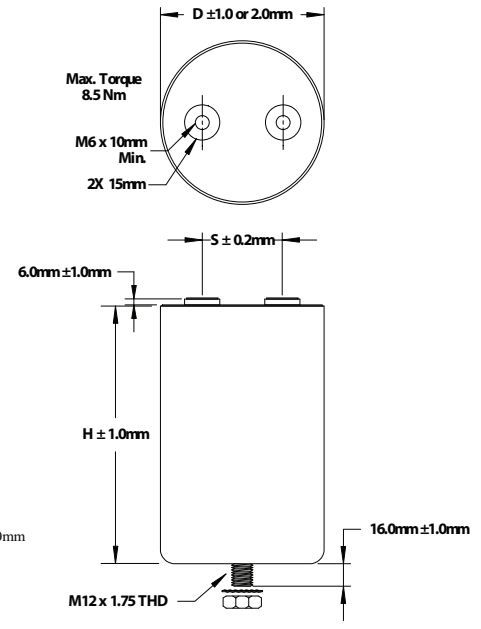

Figure 3

CDE Cornell Dubilier • 1605 E. Rodney French Blvd. • New Bedford, MA 02744 • Phone: (508)996-8561 • Fax: (508)996-3830

Type 947C Polypropylene, DC Link Capacitors

High Current, High Capacitance for Inverter Applications

Part Numbering System

947C	361	K	801	C	A	M	S	– NS
Type	**Capacitance**	**Tolerance**	**Voltage**	**Diameter D**	**Height H**	**Terminal**	**Mounting**	**Sleeving**
947C	**361** = 360 µF	**K** = ±10 %	**801** = 800 Vdc	**C** = 90 mm	**T** = 85 mm	**I** = M5 Insert	**blank** = no stud	Specify –NS
	731 = 730 µF	**J** = ±5 %	**901** = 900 Vdc	B = 85 mm	**A** = 97 mm	Threaded	**S** = M12 Stud	for Bare Can
	152 = 1500 µF		**102** = 1000 Vdc	D = 116 mm	**B** = 120 mm	**M** = M8 Stud	Threaded	
			112 = 1100 Vdc		**G** = 140 mm	Threaded		
			122 = 1200 Vdc		**C** = 145 mm	**H** = M6 Insert		
			132 = 1300 Vdc		**L** = 165 mm	Threaded		
					D = 170 mm			

Ratings

Part Number	Cap. C (µF)	Rated Voltage Vr (Vdc)	Can Diameter D (mm)	Can Height H (mm)	Lead Spacing S (mm)	Case Area (mm^2)	Current ΔT = 40 Irms (A)	Typ ESR (mΩ)	Typ ESL (nH)	Thermal Resistance Θcc (°C/W)	Thermal Resistance Θca (°C/W)	Mass (kg)	Fig
947C311K801BTHS	310	800	85	85	31.7	34000	74	1.2	41	2.9	3.4	0.6	3
947C341K801CTMS	340	800	90	85	45.0	36800	78	1.1	41	2.8	3.1	0.7	1
947C341K801CTIS	340	800	90	85	45.0	36800	78	1.1	41	2.8	3.1	0.7	2
947C361K801CAMS	360	800	90	97	45.0	40100	72	1.3	60	3.0	2.9	0.9	1
947C361K801CAIS	360	800	90	97	45.0	40100	72	1.3	60	3.0	2.9	0.9	2
947C381K801BAHS	380	800	85	97	31.7	37300	71	1.4	44	2.7	3.1	0.7	3
947C411K801CAMS	410	800	90	97	45.0	40100	74	1.3	44	2.7	2.9	0.7	1
947C411K801CAIS	410	800	90	97	45.0	40100	74	1.3	44	2.7	2.9	0.7	2
947C491K801CBMS	490	800	90	120	45.0	46700	70	1.6	75	2.6	2.5	1.0	1
947C491K801CBIS	490	800	90	120	45.0	46700	70	1.6	75	2.6	2.5	1.0	2
947C511K801BBHS	510	800	85	120	31.7	43400	66	1.8	50	2.3	2.6	0.8	3
947C561K801CBMS	560	800	90	120	45.0	46700	70	1.7	50	2.3	2.5	0.9	1
947C561K801CBIS	560	800	90	120	45.0	46700	70	1.7	50	2.3	2.5	0.9	2
947C601K801CCMS	600	800	90	145	45.0	53700	68	2.0	85	2.2	2.1	1.2	1
947C601K801CCIS	600	800	90	145	45.0	53700	68	2.0	85	2.2	2.1	1.2	2
947C621K801DTHS	620	800	116	85	50.0	52100	99	0.7	44	2.1	2.2	1.1	3
947C651K801BGHS	650	800	85	140	31.7	48700	64	2.2	55	2.0	2.4	0.9	3
947C701K801CCMS	700	800	90	145	45.0	53700	68	2.1	56	2.0	2.1	1.1	1
947C701K801CCIS	700	800	90	145	45.0	53700	68	2.1	56	2.0	2.1	1.1	2
947C731K801CDMS	730	800	90	170	45.0	60800	68	2.3	95	1.9	1.9	1.3	1
947C731K801CDIS	730	800	90	170	45.0	60800	68	2.3	95	1.9	1.9	1.3	2
947C751K801DAHS	750	800	116	97	50.0	56500	94	0.8	48	2.1	2	1.2	3
947C791K801BDHS	790	800	85	170	31.7	56700	63	2.7	63	1.7	2	1.1	3
947C851K801CDMS	850	800	90	170	45.0	60800	66	2.5	63	1.7	1.9	1.2	1
947C851K801CDIS	850	800	90	170	45.0	60800	66	2.5	63	1.7	1.9	1.2	2
947C102K801DBHS	1000	800	116	120	50.0	64900	86	1.1	54	2.0	1.8	1.4	3
947C122K801DCHS	1200	800	116	145	50.0	74000	80	1.4	61	1.9	1.6	1.7	3
947C152K801DLHS	1500	800	116	165	50.0	81300	79	1.6	67	1.7	1.4	1.9	3
947C241K901BTHS	240	900	85	85	31.7	34000	70	1.3	41	2.9	3.4	0.6	3

Type 947C Polypropylene, DC Link Capacitors

High Current, High Capacitance for Inverter Applications

Part Number	Cap. C (µF)	Rated Voltage Vr (Vdc)	Can Diameter D (mm)	Can Height H (mm)	Lead Spacing S (mm)	Case Area (mm^2)	Current ΔT = 40 Irms (A)	Typ ESR (mΩ)	Typ ESL (nH)	Thermal Resistance Θcc (°C/W)	Thermal Resistance Θca (°C/W)	Mass (kg)	Fig
947C261K901CTMS	260	900	90	85	45.0	36800	73	1.2	41	2.9	3.1	0.7	1
947C261K901CTIS	260	900	90	85	45.0	36800	73	1.2	41	2.9	3.1	0.7	2
947C291K901BAHS	290	900	85	97	31.7	37300	66	1.6	44	2.7	3.1	0.7	3
947C321K901CAMS	320	900	90	97	45.0	40100	71	1.4	44	2.7	2.9	0.7	1
947C321K901CAIS	320	900	90	97	45.0	40100	71	1.4	44	2.7	2.9	0.7	2
947C401K901BBHS	400	900	85	120	31.7	43400	63	2.0	50	2.3	2.6	0.8	3
947C431K901CBMS	430	900	90	120	45.0	46700	66	1.9	50	2.3	2.5	0.9	1
947C431K901CBIS	430	900	90	120	45.0	46700	66	1.9	50	2.3	2.5	0.9	2
947C481K901DTHS	480	900	116	85	50.0	52100	94	0.8	44	2.1	2.2	1.1	3
947C511K901BGHS	510	900	85	140	31.7	48700	61	2.5	55	2.0	2.4	0.9	3
947C551K901CCMS	550	900	90	145	45.0	53700	64	2.3	56	2.0	2.1	1.0	1
947C551K901CCIS	550	900	90	145	45.0	53700	64	2.3	56	2.0	2.1	1.0	2
947C581K901DAHS	580	900	116	97	50.0	56500	89	0.9	48	2.1	2	1.2	3
947C611K901BDHS	610	900	85	170	31.7	56700	60	3.0	63	1.7	2	1.1	3
947C661K901CDMS	660	900	90	170	45.0	60800	63	2.8	63	1.8	1.9	1.2	1
947C661K901CDIS	660	900	90	170	45.0	60800	63	2.8	63	1.8	1.9	1.2	2
947C791K901DBHS	790	900	116	120	50.0	64900	83	1.2	54	2.0	1.8	1.4	3
947C102K901DCHS	1000	900	116	145	50.0	74000	79	1.4	61	1.8	1.6	1.7	3
947C122K901DLHS	1200	900	116	165	50.0	81300	77	1.7	67	1.6	1.4	1.9	3
947C191K102BTHS	190	1000	85	85	31.7	34000	66	1.5	41	2.9	3.4	0.6	3
947C211K102CTMS	210	1000	90	85	45.0	36800	71	1.3	41	2.9	3.1	0.7	1
947C211K102CTIS	210	1000	90	85	45.0	36800	71	1.3	41	2.9	3.1	0.7	2
947C231K102CAMS	230	1000	90	97	45.0	40100	67	1.5	60	3.0	2.9	0.9	1
947C231K102CAIS	230	1000	90	97	45.0	40100	67	1.5	60	3.0	2.9	0.9	2
947C241K102BAHS	240	1000	85	97	31.7	37300	65	1.7	44	2.7	3.1	0.7	3
947C251K102CAMS	250	1000	90	97	45.0	40100	66	1.6	44	2.7	2.9	0.8	1
947C251K102CAIS	250	1000	90	97	45.0	40100	66	1.6	44	2.7	2.9	0.8	2
947C311K102CBMS	310	1000	90	120	45.0	46700	63	2.0	75	2.6	2.5	1.0	1
947C311K102CBIS	310	1000	90	120	45.0	46700	63	2.0	75	2.6	2.5	1.0	2
947C321K102BBHS	320	1000	85	120	31.7	43400	60	2.2	50	2.3	2.6	0.8	3
947C351K102CBMS	350	1000	90	120	45.0	46700	64	2.1	50	2.3	2.5	0.9	1
947C351K102CBIS	350	1000	90	120	45.0	46700	64	2.1	50	2.3	2.5	0.9	2
947C381K102DTHS	380	1000	116	85	50.0	52100	90	0.8	44	2.2	2.2	1.1	3
947C391K102CCMS	390	1000	90	145	45.0	53700	62	2.4	85	2.2	2.1	1.2	1
947C391K102CCIS	390	1000	90	145	45.0	53700	62	2.4	85	2.2	2.1	1.2	2
947C411K102BGHS	410	1000	85	140	31.7	48700	58	2.7	55	2.0	2.4	0.9	3
947C441K102CCMS	440	1000	90	145	45.0	53700	61	2.6	56	2.0	2.1	1.1	1
947C441K102CCIS	440	1000	90	145	45.0	53700	61	2.6	56	2.0	2.1	1.1	2
947C471K102DAHS	470	1000	116	97	50.0	56500	86	1.0	48	2.1	2	1.2	3
947C471K102CDMS	470	1000	90	170	45.0	60800	60	2.9	95	1.9	1.9	1.3	1
947C471K102CDIS	470	1000	90	170	45.0	60800	60	2.9	95	1.9	1.9	1.3	2
947C491K102BDHS	490	1000	85	170	31.7	56700	57	3.3	63	1.7	2	1.1	3

Type 947C Polypropylene, DC Link Capacitors

High Current, High Capacitance for Inverter Applications

Part Number	Cap. C (µF)	Rated Voltage Vr (Vdc)	Can Diameter D (mm)	Can Height H (mm)	Lead Spacing S (mm)	Case Area (mm^2)	Current ΔT = 40 Irms (A)	Typ ESR (mΩ)	Typ ESL (nH)	Thermal Resistance Θcc (°C/W)	Thermal Resistance Θca (°C/W)	Mass (kg)	Fig
947C531K102CDMS	530	1000	90	170	45.0	60800	60	3.1	63	1.8	1.9	1.2	1
947C531K102CDIS	530	1000	90	170	45.0	60800	60	3.1	63	1.8	1.9	1.2	2
947C641K102DBHS	640	1000	116	120	50.0	64900	80	1.3	54	2.0	1.8	1.4	3
947C801K102DCHS	800	1000	116	145	50.0	74000	76	1.5	61	1.8	1.6	1.7	3
947C971K102DLHS	970	1000	116	165	50.0	81300	74	1.8	67	1.6	1.4	1.9	3
947C161K112BTHS	160	1100	85	85	31.7	34000	64	1.5	41	2.9	3.4	0.6	3
947C171K112CTMS	170	1100	90	85	45.0	36800	67	1.5	41	2.9	3.1	0.7	1
947C171K112CTIS	170	1100	90	85	45.0	36800	67	1.5	41	2.9	3.1	0.7	2
947C191K112BAHS	190	1100	85	97	31.7	37300	61	1.9	44	2.7	3.1	0.7	3
947C211K112CAMS	210	1100	90	97	45.0	40100	65	1.7	44	2.7	2.9	0.8	1
947C211K112CAIS	210	1100	90	97	45.0	40100	65	1.7	44	2.7	2.9	0.8	2
947C261K112BBHS	260	1100	85	120	31.7	43400	57	2.5	50	2.3	2.6	0.8	3
947C281K112CBMS	280	1100	90	120	45.0	46700	60	2.3	50	2.3	2.5	0.9	1
947C281K112CBIS	280	1100	90	120	45.0	46700	60	2.3	50	2.3	2.5	0.9	2
947C311K112DTHS	310	1100	116	85	50.0	52100	86	0.9	44	2.2	2.2	1.1	3
947C331K112BCHS	330	1100	85	145	31.7	50100	55	3.0	56	2.0	2.3	0.9	3
947C361K112CCMS	360	1100	90	145	45.0	53700	59	2.8	56	2.0	2.1	1.1	1
947C361K112CCIS	360	1100	90	145	45.0	53700	59	2.8	56	2.0	2.1	1.1	2
947C381K112DAHS	380	1100	116	97	50.0	56500	82	1.1	48	2.2	2	1.2	3
947C401K112BDHS	400	1100	85	170	31.7	56700	54	3.6	63	1.7	2	1.1	3
947C431K112CDMS	430	1100	90	170	45.0	60800	57	3.4	63	1.8	1.9	1.2	1
947C431K112CDIS	430	1100	90	170	45.0	60800	57	3.4	63	1.8	1.9	1.2	2
947C521K112DBHS	520	1100	116	120	50.0	64900	76	1.4	54	2.0	1.8	1.4	3
947C661K112DCHS	660	1100	116	145	50.0	74000	73	1.7	61	1.8	1.6	1.7	3
947C801K112DLHS	800	1100	116	165	50.0	81300	71	2.0	67	1.6	1.4	1.9	3
947C131K122BTHS	130	1200	85	85	31.7	34000	61	1.7	41	2.9	3.4	0.6	3
947C141K122CTIS	140	1200	90	85	45.0	36800	64	1.6	41	2.9	3.1	0.7	1
947C141K122CTIS	140	1200	90	85	45.0	36800	64	1.6	41	2.9	3.1	0.7	2
947C161K122BAHS	160	1200	85	97	31.7	37300	59	2.0	44	2.7	3.1	0.7	3
947C161K122CAMS	160	1200	90	97	45.0	40100	62	1.8	60	3.0	2.9	0.9	1
947C161K122CAIS	160	1200	90	97	45.0	40100	62	1.8	60	3.0	2.9	0.9	2
947C171K122CAMS	170	1200	90	97	45.0	40100	61	1.9	44	2.8	2.9	0.8	1
947C171K122CAIS	170	1200	90	97	45.0	40100	61	1.9	44	2.8	2.9	0.8	2
947C211K122CBMS	210	1200	90	120	45.0	46700	57	2.4	75	2.6	2.5	1.0	1
947C211K122CBIS	210	1200	90	120	45.0	46700	57	2.4	75	2.6	2.5	1.0	2
947C221K122BBHS	220	1200	85	120	31.7	43400	55	2.6	50	2.3	2.6	0.8	3
947C241K122CBMS	240	1200	90	120	45.0	46700	59	2.4	50	2.3	2.5	0.9	1
947C241K122CBIS	240	1200	90	120	45.0	46700	59	2.4	50	2.3	2.5	0.9	2
947C261K122DTHS	260	1200	116	85	50.0	52100	84	1.0	44	2.2	2.2	1.1	3
947C271K122CCMS	270	1200	90	145	45.0	53700	56	2.9	85	2.2	2.1	1.2	1
947C271K122CCIS	270	1200	90	145	45.0	53700	56	2.9	85	2.2	2.1	1.2	2
947C281K122BGHS	280	1200	85	140	31.7	48700	53	3.3	55	2.0	2.4	0.9	3

Type 947C Polypropylene, DC Link Capacitors

High Current, High Capacitance for Inverter Applications

Part Number	Cap. C (µF)	Rated Voltage Vr (Vdc)	Can Diameter D (mm)	Can Height H (mm)	Lead Spacing S (mm)	Case Area (mm^2)	Current ΔT = 40 Irms (A)	Typ ESR (mΩ)	Typ ESL (nH)	Thermal Resistance Θcc (°C/W)	Thermal Resistance Θca (°C/W)	Mass (kg)	Fig
947C301K122CCMS	300	1200	90	145	45.0	53700	56	3.1	56	2.0	2.1	1.1	1
947C301K122CCIS	300	1200	90	145	45.0	53700	56	3.1	56	2.0	2.1	1.1	2
947C321K122DAHS	320	1200	116	97	50.0	56500	80	1.1	48	2.1	2	1.2	3
947C321K122CDMS	320	1200	90	170	45.0	60800	56	3.4	95	1.9	1.9	1.3	1
947C321K122CDIS	320	1200	90	170	45.0	60800	56	3.4	95	1.9	1.9	1.3	2
947C331K122BDHS	330	1200	85	170	31.7	56700	52	4.0	63	1.7	2	1.1	3
947C361K122CDMS	360	1200	90	170	45.0	60800	55	3.7	63	1.8	1.9	1.2	1
947C361K122CDIS	360	1200	90	170	45.0	60800	55	3.7	63	1.8	1.9	1.2	2
947C431K122DBHS	430	1200	116	120	50.0	64900	73	1.5	54	2.0	1.8	1.4	3
947C551K122DCHS	550	1200	116	145	50.0	74000	70	1.8	61	1.8	1.6	1.7	3
947C661K122DLHS	660	1200	116	165	50.0	81300	68	2.2	67	1.6	1.4	1.9	3
947C111K132BTHS	110	1300	85	85	31.7	34000	59	1.8	41	2.9	3.4	0.6	3
947C121K132CTMS	120	1300	90	85	45.0	36800	62	1.7	41	2.9	3.1	0.7	1
947C121K132CTIS	120	1300	90	85	45.0	36800	62	1.7	41	2.9	3.1	0.7	2
947C131K132BAHS	130	1300	85	97	31.7	37300	55	2.3	44	2.8	3.1	0.7	3
947C151K132CAMS	150	1300	90	97	45.0	40100	60	2.0	44	2.7	2.9	0.7	1
947C151K132CAIS	150	1300	90	97	45.0	40100	60	2.0	44	2.7	2.9	0.7	2
947C181K132BBHS	180	1300	85	120	31.7	43400	52	2.9	50	2.3	2.6	0.8	3
947C201K132CBMS	200	1300	90	120	45.0	46700	56	2.7	50	2.3	2.5	0.9	1
947C201K132CBIS	200	1300	90	120	45.0	46700	56	2.7	50	2.3	2.5	0.9	2
947C221K132DTHS	220	1300	116	85	50.0	52100	81	1.0	44	2.2	2.2	1.1	3
947C231K132BGHS	230	1300	85	140	31.7	48700	50	3.6	55	2.0	2.4	0.9	3
947C251K132CCMS	250	1300	90	145	45.0	53700	54	3.3	56	2.0	2.1	1.1	1
947C251K132CCIS	250	1300	90	145	45.0	53700	54	3.3	56	2.0	2.1	1.1	2
947C271K132DAHS	270	1300	116	97	50.0	56500	77	1.2	48	2.1	2	1.2	3
947C281K132BDHS	280	1300	85	170	31.7	56700	50	4.3	63	1.7	2	1.1	3
947C311K132CDMS	310	1300	90	170	45.0	60800	53	3.9	63	1.7	1.9	1.2	1
947C311K132CDIS	310	1300	90	170	45.0	60800	53	3.9	63	1.7	1.9	1.2	2
947C371K132DBHS	370	1300	116	120	50.0	64900	71	1.6	54	2.0	1.8	1.4	3
947C461K132DCHS	460	1300	116	145	50.0	74000	67	2.0	61	1.8	1.6	1.7	3
947C561K132DLHS	560	1300	116	165	50.0	81300	65	2.3	67	1.6	1.4	1.9	3

1. Rated Current is for temperature rise of +40 °C at 1–20 kHz.
2. θcc is core-to-case thermal resistance at 0–10 kHz. For higher frequency see Expected Lifetime Predictions.
3. θca is case-to-ambient thermal resistance for still air. For moving air see Expected Lifetime Predictions.

Type 947C Polypropylene, DC Link Capacitors

High Current, High Capacitance for Inverter Applications

Expected Lifetime Predictions

To use the Expected Lifetime curves calculate Va/Vr and core temperature T. Start by estimating:

Applied dc voltage Va
Ripple Current I
Ripple Frequency f
Ambient Temperature Ta
Airflow speed v

Units:

A=m^2	T, Ta & Tc=°C
C=µF	θ, θca & θcc =°C/W
ESR=mW	v=m/s
f=kHz	Va &Vr=Vdc
I=A	

NOTE: The temperature rise in the 947C is I^2(ESR) times the thermal resistance θ. The ESR is mainly the metal resistance; the metal resistance is the 10 kHz ESR. For operation below 10 kHz add the dielectric resistance. It is the dielectric dissipation factor—no more than 0.0002—times the capacitive reactance, i.e., 0.0002/(2πfC). That's equal to 31.83/(fC).

1. Start with the 10 kHz ESR from the Ratings table. If frequency is less than 10 kHz, add 31.83/(fC).

2. Compute total thermal resistance θ as the sum of core-to-case thermal resistance θcc and case-to-ambient thermal resistance θca. Both are in the Ratings table but θca is for still air and θcc is for 10 kHz or less. For frequency > 10 kHz multiply θcc by [1+(f –10)/100], e.g., for 75 kHz multiply θcc by 1.65. For moving air use the capacitor surface area A and airflow speed v to calculate $\theta ca = 1/[A(5+17(v+0.1)^{0.66})]$.

3. Compute Va/Vr and the core temperature T.
$T = Ta + I^2(ESR)\theta$

4. Look up estimated lifetime from the Expected Lifetime curves.

5. If you want a longer expected lifetime, choose a capacitor with higher voltage rating or consider using multiple capacitors in parallel to share the ripple current.

Permissible Voltage Surge Duty for 100,000 Hour Life Expectancy at 50°C Core Temperature

Factor	Duration	Frequency
1.67x	t ≤ 100 ms	1x/day
1.50x	t ≤ 5 minutes	1x/day
1.30x	t ≤ 2.5 hours	1x/day
1.10x	t ≤ 9.6 hours	1x/day
1.00x	balance (11.9 h)	1x/day

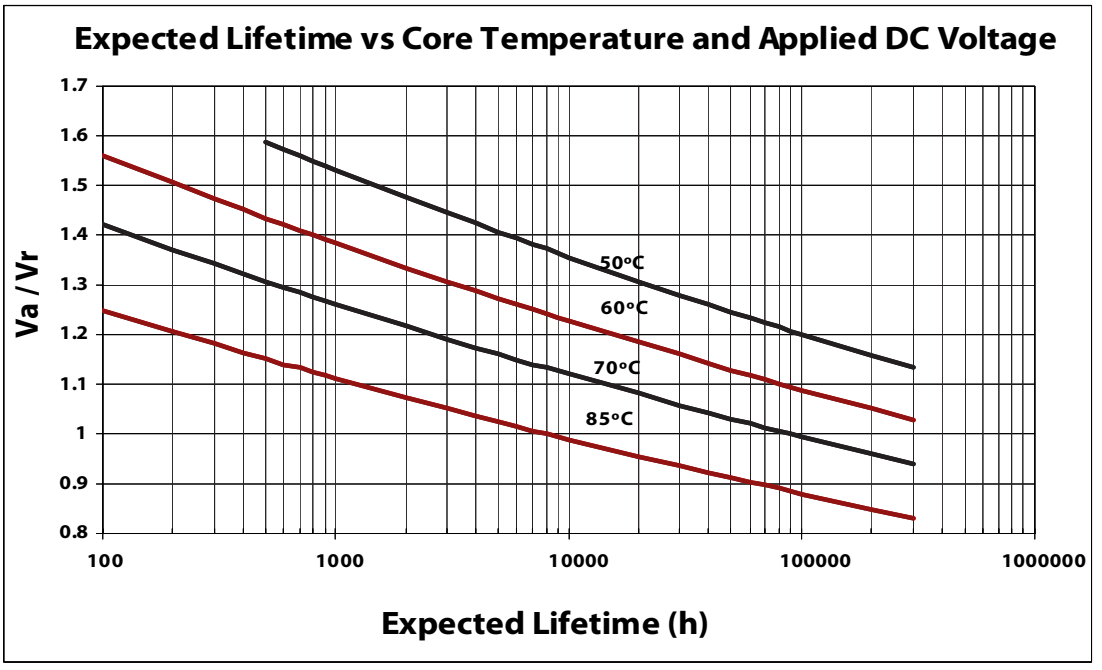

Type 947C Polypropylene, DC Link Capacitors

High Current, High Capacitance for Inverter Applications

Typical Performance Curves

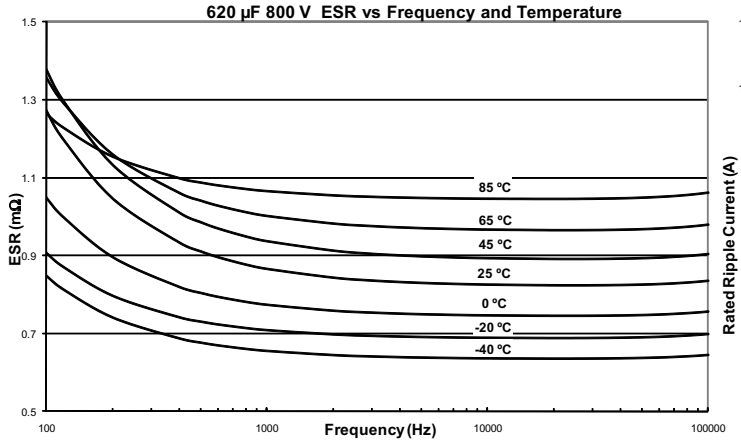

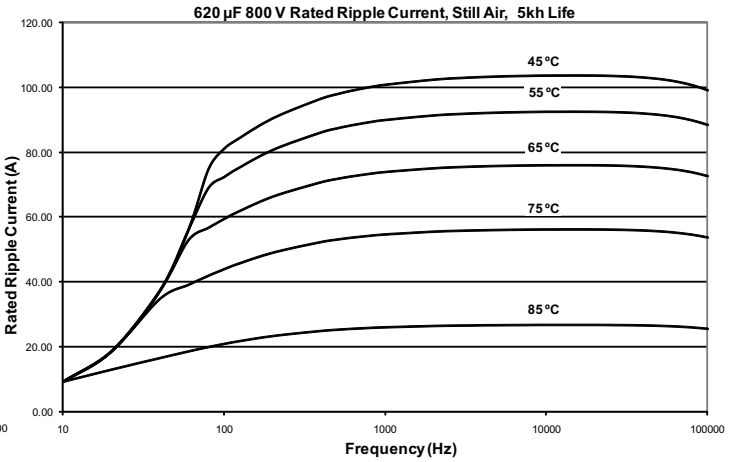

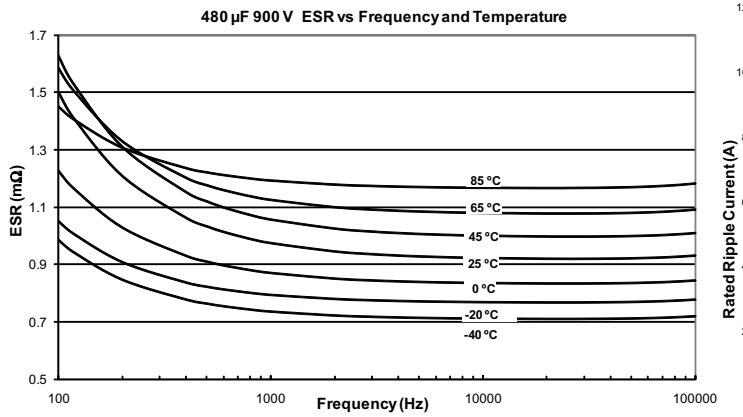

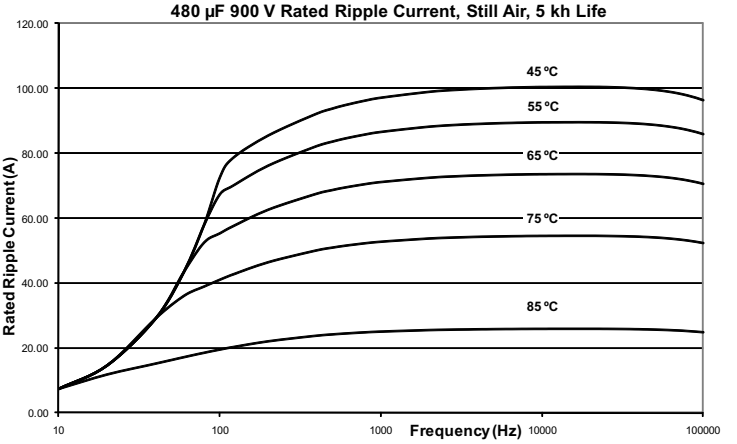

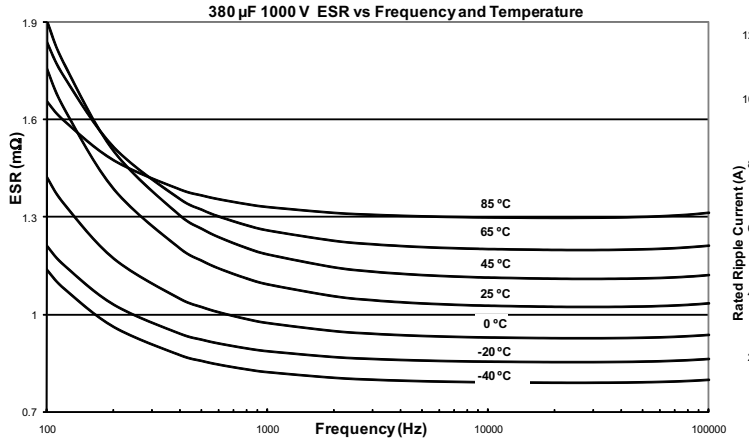

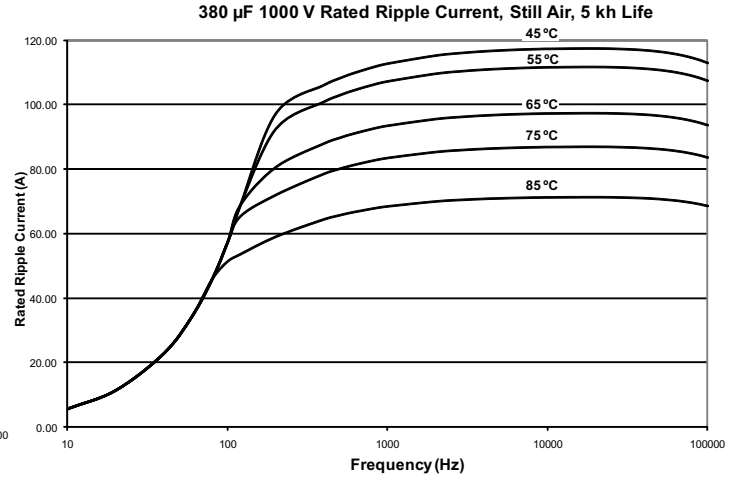

Type 947C Polypropylene, DC Link Capacitors

High Current, High Capacitance for Inverter Applications

Typical Performance Curves

