DSECONTROL®
MONITORING WITH INTELLIGENCE.

DSE5110 & DSE5120
AUTO START & AUTO MAINS FAILURE CONTROL MODULES

DSE5110



DSE5120



The DSE5110 is an Automatic Start Control Module designed to automatically start and stop diesel and gas generating sets that include non electronic engines. The module also provides excellent engine monitoring and protection features.

The module has the ability to monitor under speed, over speed, charge failure, emergency stop, low oil pressure, high engine temperature, fail to start, fail to stop and loss of the speed sensing signal. The module displays fault conditions on the LCD display and via the LED indicators on the front.

The DSE5120 is an Automatic Mains Failure Control Module and includes all the features of the DSE5110 plus the ability to monitor a mains (utility) supply. Upon detection of a mains (utility) failure the module automatically starts the generating set. Once the mains power has been restored it instructs the generating set to stop.

FEATURES
- Automatic start
- Automatic mains (utility) failure detection (DSE5120 only)
- Automatic load transfer
- Configurable inputs
- Configurable outputs
- Configurable alarms & timers
- Digital inputs
- Analogue inputs
- Back-lit character LCD display
- Engine protection
- Front panel mounting
- Icon based fault diagnostics
- PC configurable
- Front panel programming
- Remote monitoring
- LCD alarm indication
- LED alarm indication

BENEFITS
- In-built engine diagnostics removes the requirement for service equipment
- License free PC software
- Modules help to improve the life cycle of engine starter motors
- On-site module configuration
- User-friendly set-up and button layout

OPERATION
The modules are operated using the front STOP, AUTO and MANUAL push buttons. The DSE5120 also includes a TEST button. An additional push button on both modules allows the user to scroll through the LCD instrumentation display.

CONFIGURATION
The modules can be configured using the front panel buttons or the DSE810 interface and PC software.

SPECIFICATION

DC SUPPLY
8V to 35V continuous

CRANKING DROPOUTS
Able to survive 0V for 50mS, providing the supply was at least 10V before dropout and supply recovers to 5V

START RELAY OUTPUT
16A DC supply at supply voltage

FUEL RELAY OUTPUT
16A DC at supply voltage

AUXILIARY RELAY OUTPUTS
5A DC at supply voltage

CHARGE FAIL/EXCITATION RANGE
0V to 35V

MAXIMUM OPERATING CURRENT
320mA at 12V, 215mA at 24V

MAXIMUM STANDBY CURRENT
175mA at 12V, 95mA at 24V

ALTERNATOR INPUT RANGE
15V (L-N) to 333V AC (L-N) absolute maximum

ALTERNATOR INPUT FREQUENCY
50-60 Hz at rated engine speed (Minimum: 15V AC L-N)

MAGNETIC PICK-UP VOLTAGE INPUT RANGE
+/- 0.5V to 70V Peak

MAGNETIC INPUT FREQUENCY
10,000 Hz (max) at rated engine speed

GENERATOR & MAINS (UTILITY) LOADING RELAY
(DSE5120 only)
8A at 240V

MAINS (UTILITY) SUPPLY INPUT RANGE
(DSE5120 only)
15V (L-N) to 333V AC (L-N) absolute maximum

MAINS (UTILITY) SUPPLY INPUT FREQUENCY
(DSE5120 only)
10,000 Hz (max) at rated engine speed

MODULE DIMENSIONS (WXH)
240mm x 172mm
9.4" x 6.8"

PANEL CUT-OUT (WXH)
220mm x 160mm
8.7" x 6.3"

MAXIMUM PANEL THICKNESS
8mm
0.3"

ENVIRONMENTAL TESTING STANDARDS

ELECTRO MAGNETIC CAPABILITY
BS EN 61000-6-2
EMC Generic Emission Standard for the Industrial Environment
BS EN 61000-6-4
EMC Generic Emission Standard for the Industrial Environment

ELECTRICAL SAFETY
BS EN 60950
Safety of Information Technology Equipment, including Electrical Business Equipment

TEMPERATURE
BS EN 60068-2-2
Test Ab to +70°C 60067-2-2 Hot
Test Ab to -30°C 60068-2-1 Cold

VIBRATION
BS EN 60068-2-6
Ten sweeps in each of three major axes
5Hz to 8Hz @ +/-7.5mm, 8Hz to 500Hz @ 2gn

HUMIDITY
BS 2011 part 2.1 60068-2-30
Test Cb Ob Cyclic
93% RH @ 40°C for 48 hours

SHOCK
BS EN 60068-2-27
Three shocks in each of three major axes
15gn in 11mS

INPUTS & OUTPUTS

Analogue inputs are provided for oil pressure and engine temperature. These connect to conventional engine mounted resistive sender units to provide accurate monitoring and protection facilities. The modules can also be configured to interface with digital switch type inputs for low oil pressure and high engine temperature shutdowns.

Relay outputs are provided for fuel solenoid output, start output and three additional configurable outputs. A range of different functions, conditions or alarms can be selected for the three configurable relay outputs. These outputs are fed from the permanent plant supply.

DSE5120 only
Dedicated outputs are provided for the control of both the mains (utility) and generator switching devices. This feature combined with the inbuilt incoming mains (utility) supply sensing, removes the requirement for expensive external devices.

INSTRUMENTATION

The modules provide advanced metering facilities, displaying the information on the LCD display. The information can be accessed using the display scroll push buttons located next to the LCD display.

Generator Volts L1-N, L2-N, L3-N
Generator Volts L1-L2, L2-L3, L3-L1
Generator Amps L1,L2, L3
Engine Speed RPM
Generator Frequency Hz
Engine Oil Pressure (PSI & Bar)
Engine Temperature (°C & °F)
Plant Battery Volts
Engine Run Hours

RELATED MATERIALS

TITLE	PART NO'S
DSE5110 Installation Instructions	053-038
DSE5120 Installation Instructions	053-022
DSE5110 Manual	057-009
DSE5120 Manual	057-010
DSE51xx Software Manual	057-005

DSE5110 & DSE5120

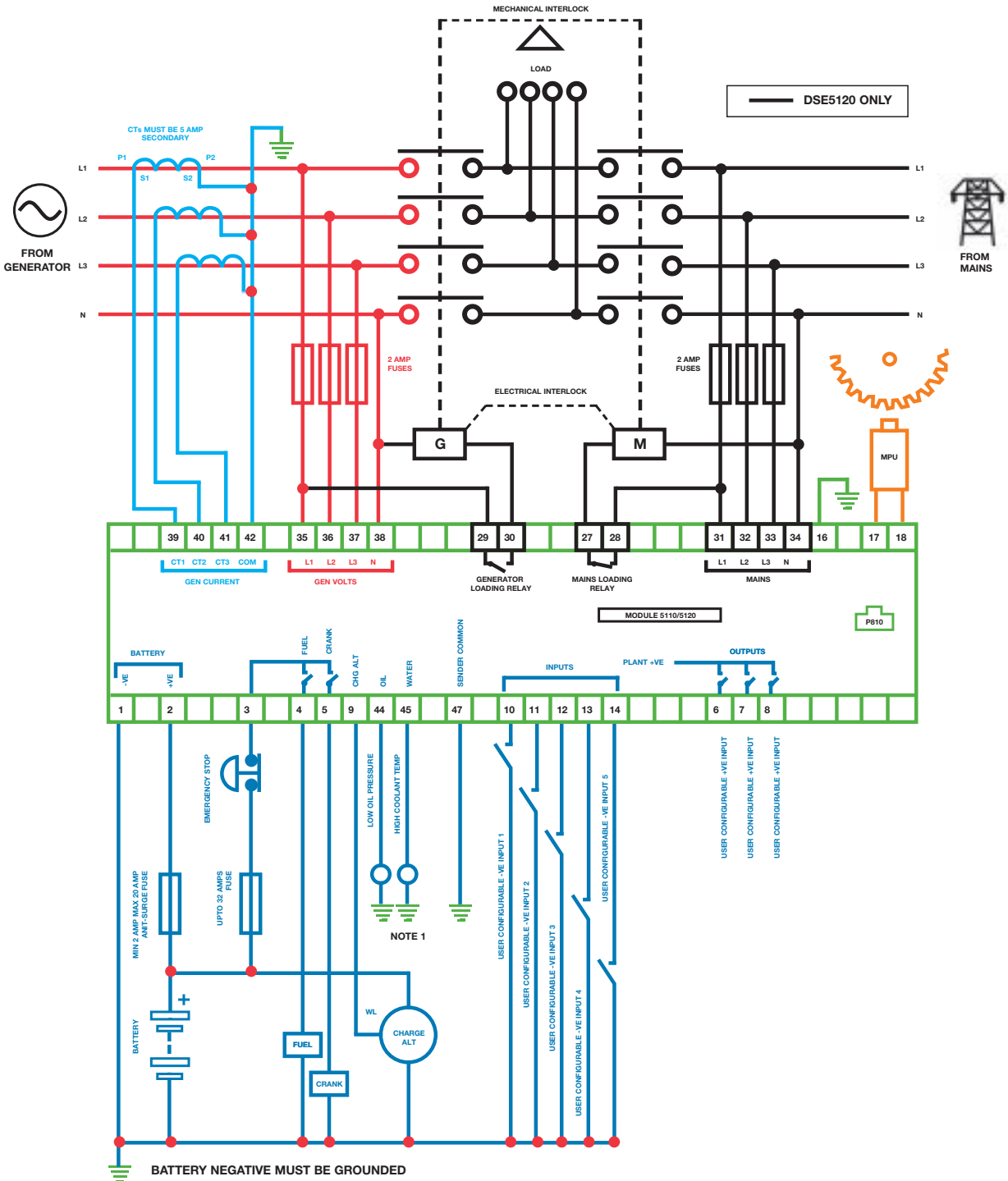

BATTERY NEGATIVE MUST BE GROUNDED

TERMINALS SUITABLE FOR 22-16 AWG (0.6mm - 1.3mm) FIELD WIRING

TIGHTENING TORQUE = 0.8Nm (7lb-in)

TIGHTENING TORQUE = 0.8Nm (7lb-in)

NOTE 1

THESE GROUND CONNECTIONS MUST BE ON THE ENGINE BLOCK, AND MUST BE TO THE SENDER BODIES. THE GROUND WIRE TO TERMINAL 47 MUST NOT BE USED TO PROVIDE A GROUND CONNECTION TO ANY OTHER DEVICE

DEEP SEA ELECTRONICS PLC
Highfield House
Hunmanby Industrial Estate
Hunmanby, North Yorkshire
YO14 0PH England

TELEPHONE
+44 (0)1723 890099

FACSIMILE
+44 (0)1723 893303

EMAIL
sales@deepseaplc.com

WEBSITE
www.deepseaplc.com

Registered in England & Wales No.01319649

VAT No.316923457

DEEP SEA ELECTRONICS INC
3230 Williams Avenue
Rockford
IL 61101-2668 USA

TELEPHONE
+1 (815) 316 8706

FACSIMILE
+1 (815) 316 8708

EMAIL
sales@deepseausa.com

WEBSITE
www.deepseausa.com

YOUR LOCAL DISTRIBUTOR.

DEEP SEA ELECTRONICS PLC maintains a policy of continuous development and reserves the right to change the details shown on this data sheet without prior notice. The contents are intended for guidance only.

This data sheet is printed on 9lives 55 Silk, which is produced with 55% recycled fibre from both pre and post-consumer sources, together with 45% virgin ECF fibre.

055-036/02/08 (2)