North American fuse links

FWH - 500 V a.c. / V d.c. (UL), 35 A to 1600 A



Specifications

Description

North American style bolted tags high speed fuse links, for the protection of DC common bus, power converters/rectifiers and reduced rated voltage starters.

Technical data

- Rated voltage:
  - 500 V a.c. (UL)
  - 500 V d.c. (35 A to 800 A only)
- Rated current: 35 A to 1600 A
- Breaking capacity:
  - 200 kA RMS Sym.
  - 50 kA at 500 V d.c.

Standards / Agency information

CE, UL Recognition JFHR2.E91958 FWH-_B (35 A to 200 A), JFHR2.E56412 FWH-_A (225 A to 800 A), CSA Component Acceptance Class 1422-30, File 53787 (35 A to 1600 A)

Catalogue numbers

Rated voltage	Rated current (Amps)	I^2t (A^2 Sec) Pre-arcing	I^2t (A^2 Sec) Clearing at 500 V a.c.	Watts loss (W)	Catalogue numbers
500 V a.c./V d.c. (UL)	35	34	150	8	FWH-35B
500 V a.c./V d.c. (UL)	40	76	320	7.5	FWH-40B
500 V a.c./V d.c. (UL)	45	105	450	7.5	FWH-45B
500 V a.c./V d.c. (UL)	50	135	670	7.5	FWH-50B
500 V a.c./V d.c. (UL)	60	210	900	9.9	FWH-60B
500 V a.c./V d.c. (UL)	70	210	900	10.6	FWH-70B
500 V a.c./V d.c. (UL)	80	305	1400	12.7	FWH-80B
500 V a.c./V d.c. (UL)	90	360	1600	15	FWH-90B
500 V a.c./V d.c. (UL)	100	475	2000	17	FWH-100B
500 V a.c./V d.c. (UL)	125	800	3500	25	FWH-125B
500 V a.c./V d.c. (UL)	150	1100	4600	30	FWH-150B
500 V a.c./V d.c. (UL)	175	1450	6200	35	FWH-175B
500 V a.c./V d.c. (UL)	200	1900	8500	40	FWH-200B
500 V a.c./V d.c. (UL)	225	4600	23,300	39	FWH-225A
500 V a.c./V d.c. (UL)	250	6300	32,200	41	FWH-250A
500 V a.c./V d.c. (UL)	275	7900	40,300	46	FWH-275A
500 V a.c./V d.c. (UL)	300	9800	49,800	51	FWH-300A
500 V a.c./V d.c. (UL)	325	13,700	63,800	53	FWH-325A
500 V a.c./V d.c. (UL)	350	14,500	72,900	58	FWH-350A
500 V a.c./V d.c. (UL)	400	19,200	96,700	65	FWH-400A
500 V a.c./V d.c. (UL)	450	24,700	127,000	74	FWH-450A
500 V a.c./V d.c. (UL)	500	29,200	149,000	84	FWH-500A
500 V a.c./V d.c. (UL)	600	41,300	206,000	108	FWH-600A
500 V a.c./V d.c. (UL)	700	55,000	298,000	120	FWH-700A
500 V a.c./V d.c. (UL)	800	76,200	409,000	129	FWH-800A
500 V a.c./V d.c. (UL)	900	74,000	363,000	132	FWH-900A
500 V a.c. (UL)	1000	92,000	530,000	145	FWH-1000B
500 V a.c. (UL)	1200	122,000	700,000	180	FWH-1200B
500 V a.c. (UL)	1400	200,000	1,000,000	210	FWH-1400A
500 V a.c. (UL)	1600	290,000	1,400,000	230	FWH-1600A

Data sheets: 720007, 360 (350-800 A), 5785304 (35-200 A, 1000-1600 A)

FWH - 500 V a.c. / V d.c. (UL), 35 A to 1600 A

Dimensions (in) - 35 A to 1200 A

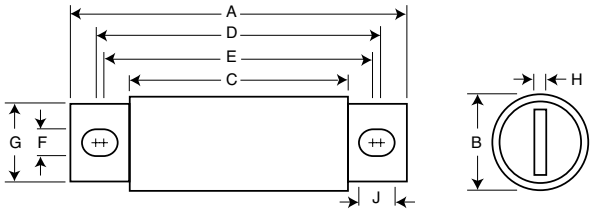

Amp range	A	B	C	D	E	F	G	H	J
35-60	3.19	0.81	1.59	2.54	2.19	0.34	0.72	0.13	0.52
70-100	3.62	0.95	1.74	2.85	2.81	0.35	0.75	0.13	0.38
125-200	3.62	1.16	1.84	2.89	2.77	0.34	1	0.19	0.41
225-400	4.34	1.5	2.09	3.44	2.75	0.41	1	0.25	0.75
450-600	4.34	2	2.09	3.53	2.78	0.41	1.5	0.25	0.78
700-800	6.34	2.5	2.09	4.97	3.44	0.53	2	0.38	1.30
1000-1200	6.97	3	3.22	5.47	4.48	0.62	2.38	0.44	1.12

1" = 25.4mm

Dimensions (in) - 1400 A and 1600 A

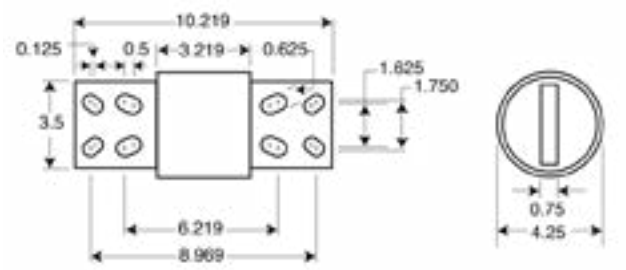

Time-current curve - 35 A to 200 A and 900 A to 1600 A

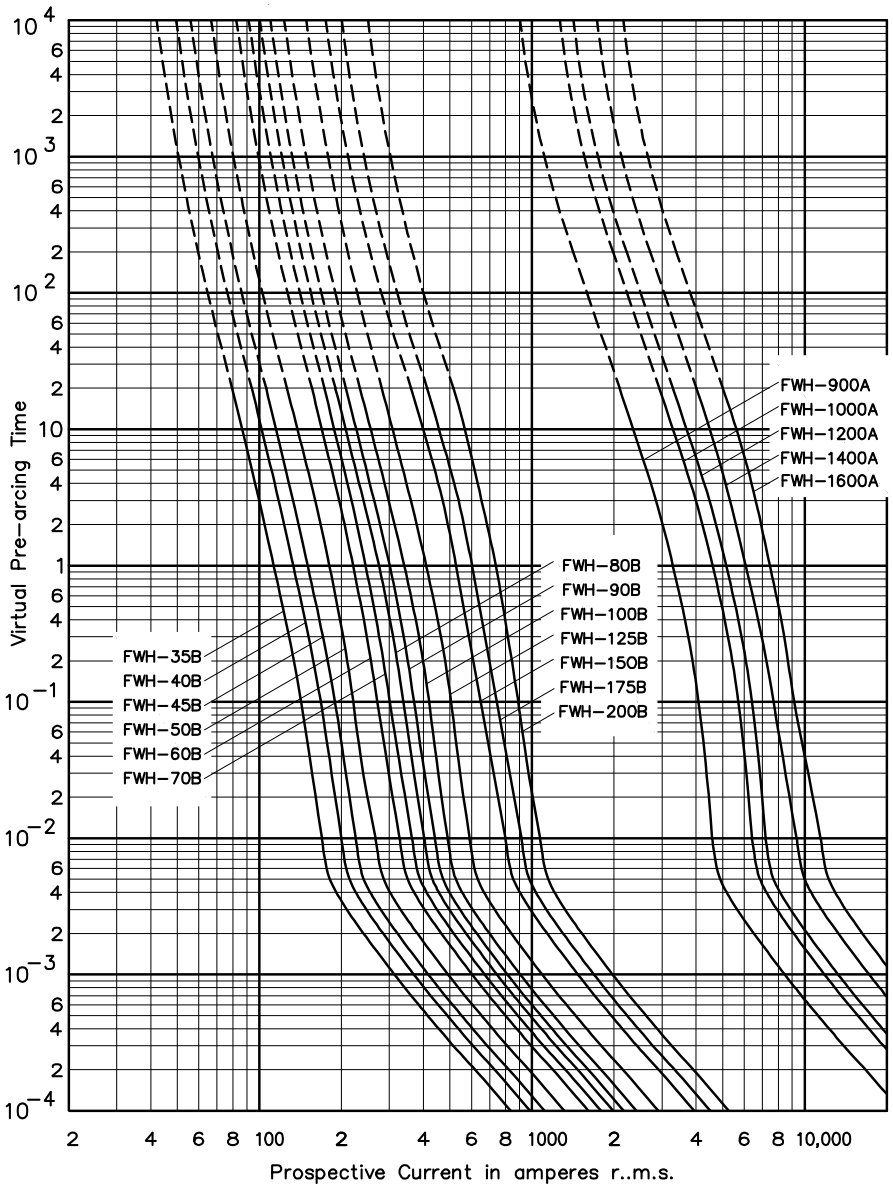

Data sheets: 720007, 360 (350-800 A), 5785304 (35-200 A, 1000-1600 A)

British standard BS88 fuse links

LCT, LET - 240 V a.c. / 150 V d.c. (IEC), 250-280 V a.c. / 150 V d.c. (UL), 6 A to 180 A

Specifications

Description

BS88 style bolted tags fuse high speed links for the protection of DC common bus, DC drives, power converters/rectifiers and reduced rated voltage starters. Low Watts loss in a compact size.



Technical Data

- Rated voltage:
  - LCT 240 V a.c. / 150 V d.c. (IEC)
    250 V a.c. / 150 V d.c. (UL)
  - LET 280 V a.c. / 150 V d.c. (UL, 25 A to 160 A)
    250 V a.c. / 150 V d.c. (UL 180 A)
- Rated current: 6 A to 180 A
- Breaking capacity:
  - 200 kA RMS Sym.
  - 50 kA DC at 150 V d.c.
- Operating Class: aR

Compatible trip indicator and microswitch for LET fuse links

- See details page 395

Standards / Agency information

CE, designed and tested to BS88 part 4, IEC 60269 Part 4, UL Recognised and CCC (LCT only). All fuse links have been tested at 318V a.c..Consult Eaton for specific UL recognition status.

Catalogue numbers

Fuse link type	Rated voltage	Rated current (Amps)	I^2t (A^2 Sec) Pre-arcing	I^2t (A^2 Sec) Clearing at 240 V a.c.	Watts loss (W)	Catalogue numbers
LCT	240 V a.c. / 150 V d.c. (IEC) 250 V a.c. / 150 V d.c. (UL)	6	2	9	1	6LCT
		10	3.8	22	2.5	10LCT
		12	7	32	2.5	12LCT
		16	20	100	2.5	16LCT
		20	25	160	4	20LCT
LET	280 V a.c. / 150 V d.c. (UL)	25	18	250	4	25LET
		32	32	450	5	32LET
		35	50	600	5	35LET
		50	100	1400	7	50LET
		63	180	2200	9	63LET
		80	300	3800	10	80LET
		100	600	7500	10	100LET
		125	600	7500	16	125LET
		160	1100	16,000	20	160LET
	250 V a.c. / 150 V d.c. (UL)	180	1600	29,000	21	180LET

Note: 7LET, 10LET, 12LET and 16LET are available for replacement purposes on existing equipment.

Data sheets: 720004, 5785296 (LCT), 5785293 (LET)

LCT, LET - 240 V a.c. / 150 V d.c. (IEC), 250-280 V a.c. / 150 V d.c. (UL), 6 A to 180 A

Dimensions (mm) - LCT

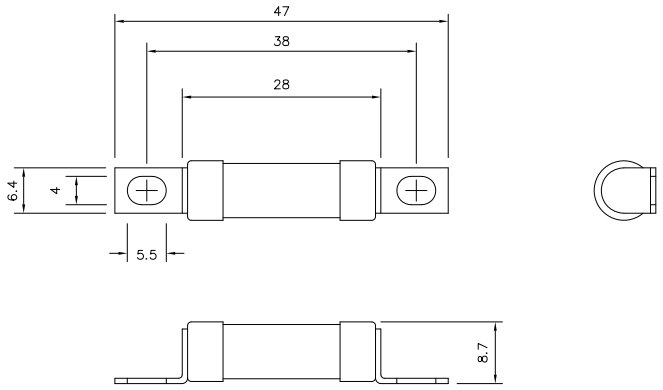

Dimensions (mm) - LET, up to 63 A

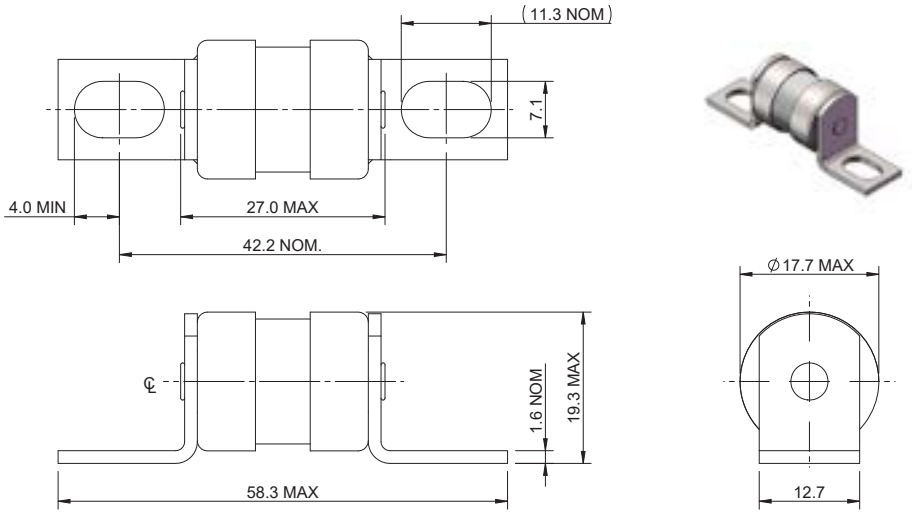

Dimensions (mm) - LET, greater than 63 A

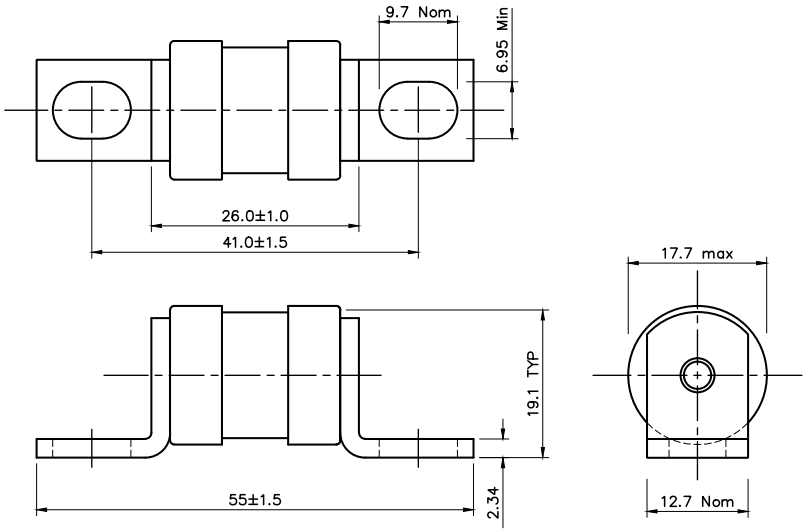

Indicator (optional).

Data sheets: 720004, 5785296 (LCT), 5785293 (LET)

CT, ET, FE, EET, FEE - 690 V a.c. / 500 V d.c. (IEC), 700 V a.c ./ 500 V d.c. (UL), 6 A to 200 A

Specifications

Description

BS88 style bolted tags high speed fuse links for the protection of DC common bus, DC drives, power converters / rectifiers and reduced rated voltage starters.



Technical data

- Rated voltage:
  - 690 V a.c. / 500 V d.c. (IEC)
  - 700 V a.c. / 500 V d.c. (UL)
- Rated current: 6 A to 200 A
- Breaking capacity:
  - CT: 90 kA RMS Sym., 40 kA at 500 V d.c. (IEC)
  - 200 kA RMS Sym., 50 kA at 500 V d.c. (UL)
  - ET, EET, FE and FEE: 200 kA RMS Sym.,50 kA at 500 V d.c.
- Operating Class: aR.

Compatible trip indicator and microswitch

- See details page 395

Standards / Agency information

CE, designed and tested to BS88 part 4, IEC 60269 Part 4, Consult Eaton for specific UL Recognition status. CCC for ET, FE, EET, FEE.

Dimensions (mm) - CT

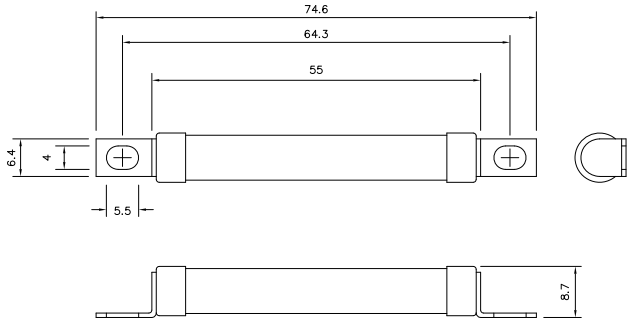

Dimensions (mm) - ET, FE up to 63 A

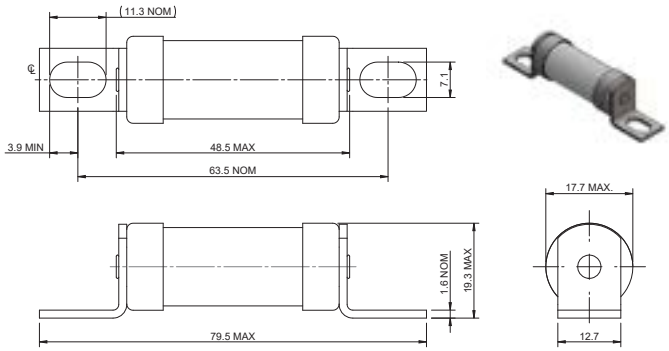

Dimensions (mm) - ET, FE greater than 63 A

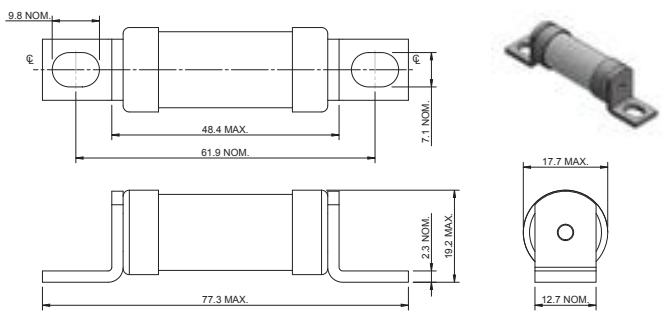

Dimensions (mm) - EET and FEE

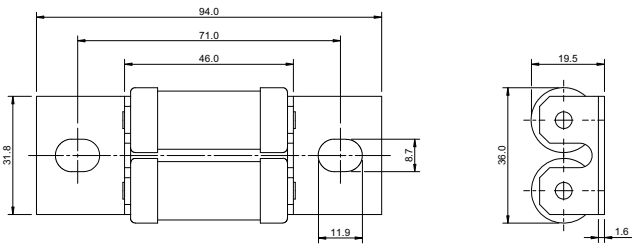

Data sheets: 720024, 5785312 (CT, ET), 5785314 (FE), 5785313 (EET), 5785292 (FEE)

British standard BS88 fuse links

CT, ET, FE, EET, FEE - 690 V a.c./500 V d.c. (IEC), 700 V a.c./500 V d.c. (UL), 6 A to 200 A

Catalogue numbers

Fuse link type	Rated voltage	Rated current (Amps)	I^2t (A^2 Sec) Pre-arcing	I^2t (A^2 Sec) Clearing at 415V a.c.	I^2t (A^2 Sec) Clearing at 660 V a.c.	Watts loss (W)	Catalogue numbers
CT	690 V a.c. / 500 V d.c. (IEC) 700 V a.c. / 500 V d.c. (UL)	6	1.8	8.5	12	2	6CT
		10	7	30	48	3	10CT
		12	10	40	65	3	12CT
		16	16	66	110	7	16CT
		20	32	150	220	7	20CT
ET	690 V a.c. / 500 V d.c. (IEC) 700 V a.c. / 500 V d.c. (UL)	25	25	150	250	7	25ET
		32	32	190	350	11	32ET
		35	52	310	500	11	35ET
		40	103	600	900	9	40ET
		45	103	680	1100	11	45ET
		56	135	950	1500	14	56ET
		63	171	1200	2000	16	63ET
		80	360	2500	4000	18	80ET
FE	690 V a.c. / 500 V d.c. (IEC) 700 V a.c. / 500 V d.c. (UL)	35	33	130	200	9	35FE
		40	52	180	300	9	40FE
		45	76	270	450	11	45FE
		50	103	380	600	11	50FE
		63	135	480	750	12	63FE
		71	210	600	950	17	71FE
		80	250	900	1500	20	80FE
		90	360	1300	2100	20	90FE
		100	470	1800	2800	23	100FE
EET	690 V a.c. / 500 V d.c. (IEC) 700 V a.c. / 700 V d.c. (UL)	90	490	3000	4500	19	90EET
		110	600	4000	6500	27	110EET
		140	1050	7000	12,000	35	140EET
		160	1500	10,000	17,000	39	160EET
FEE	690 V a.c. / 500 V d.c. (IEC) 700 V a.c. / 500 V d.c. (UL)	100	400	1600	2400	24	100FEE
		120	540	1900	3100	32	120FEE
		140	850	2500	3800	36	140FEE
		160	1000	3700	5700	46	160FEE
		180	1400	5300	8400	46	180FEE
		200	1900	7100	11,400	52	200FEE

Note: FC, 8ET, 12ET, 15ET, 20ET, 65EET and 75EET are available for replacement purposes on existings equipment.

Data sheets: 720024, 5785312 (CT, ET), 5785314 (FE), 5785313 (EET), 5785292 (FEE)

British standard BS88 fuse links

FM, FMM, MT, MMT - 690 V a.c. / 350-450 V d.c. (IEC), 700 V a.c. / 500 V d.c. (UL), 160 A to 710 A

Specifications

Description

BS88 style bolted tags high speed fuse links for the protection of DC common bus, DC drives, power converters / rectifiers and reduced rated voltage starters.



Technical data

- Rated voltage:
  - FM: 690 V a.c. / 450 V d.c. (IEC); 700 V a.c./500 V d.c. (UL)
  - FMM: 690 V a.c. / 450 V d.c. (IEC)
  - MT and MMT: 690 V a.c. / 350 V d.c. (IEC); 700 V a.c. (UL)
- Rated current: 160 A to 710 A
- Breaking capacity:
  - FM: 200 kA RMS Sym. (IEC/UL), 40 kA at 450 V d.c. (IEC), 50 kA at 500 V d.c. (UL)
  - FMM: 200 kA RMS Sym. (IEC/UL), 40 kA at 450 V d.c. (IEC)
  - MT & MMT: 200 kA RMS Sym. (IEC/UL), 40 kA at 350 V d.c. (IEC)
- Operating Class: aR

Compatible trip indicator and microswitch

- See details page 395

Standards / Agency information

CE, designed and tested to BS88 part 4, IEC 60269 Part 4, UL Recognised. MT and MMT 350 V d.c. (IEC) rating. Consult Eaton for specific UL Recognition status. CCC for FM and FMM.

Dimensions (mm) - FM and MT (indicator optional)

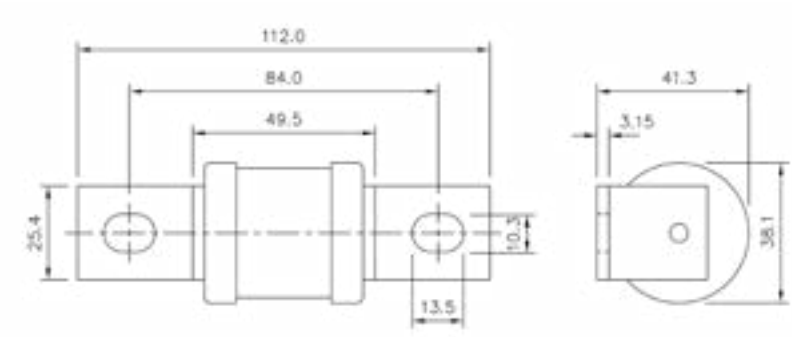

Dimensions (mm) - FMM and MMT (indicator optional)

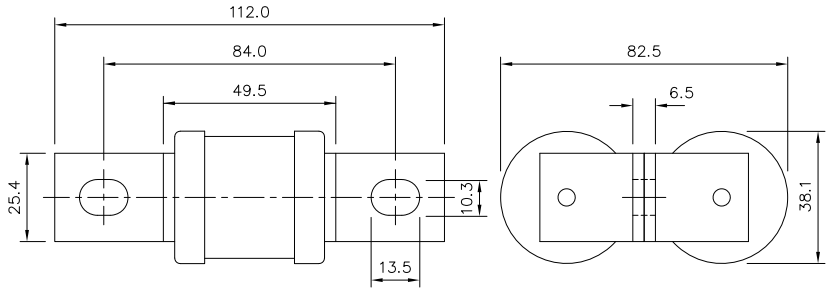

Data sheets: 720024, 5785314 (FM), 5785313 (MT), 5785292 (FMM), 5785311 (MMT)

FM, FMM, MT, MMT - 690 V a.c. / 350-450 V d.c. (IEC), 700 V a.c. / 500 V d.c. (UL), 160 A to 710 A

Catalogue numbers

			I²t (A² Sec)				
Fuse link type	**Rated voltage**	**Rated current (Amps)**	**Pre-arcing**	**Clearing at 415V a.c.**	**Clearing at 660 V a.c.**	**Watts loss (W)**	**Catalogue numbers**
FM	690 V a.c. / 450 V d.c. (IEC) 700 V a.c. / 500 V d.c. (UL)	180	1400	7500	13,500	40	180FM
		200	2600	10,500	18,500	40	200FM
		225	3700	14,500	26,500	44	225FM
		250	5200	20,500	37,500	48	250FM
		280	7000	30,500	55,000	48	280FM
		315	10,000	40,000	77,000	55	315FM
		350	15,000	60,000	105,000	55	350FM
FMM	690 V a.c. / 450 V d.c. (IEC)	400	10,000	40,000	72,500	85	400FMM
		450	15,000	60,000	105,000	90	450FMM
		500	20,000	82,000	150,000	100	500FMM
		550	30,000	120,000	215,000	100	550FMM
		630	45,000	180,000	310,000	100	630FMM
		700	60,000	245,000	420,000	120	700FMM
MT	690 V a.c. / 350 V d.c. (IEC) 700 V a.c. (UL)	160	2400	15,000	25,000	26	160MT
		180	3800	25,000	38,000	26	180MT
		200	6000	40,000	58,000	27	200MT
		250	11,500	80,000	110,000	32	250MT
		280	16,500	100,000	150,000	35	280MT
		315	19,000	125,000	180,000	42	315MT
		355	22,000	160,000	200,000	51	355MT
MMT	690 V a.c. / 350 V d.c. (IEC) 700 V a.c. (UL)	180	1650	12,000	18,000	42	180MMT
		200	2200	16,000	23,000	42	200MMT
		225	3700	26,000	40,000	42	225MMT
		280	6600	47,000	70,000	47	280MMT
		315	8600	62,000	91,000	51	315MMT
		355	13,500	97,000	140,000	54	355MMT
		400	21,000	150,000	220,000	60	400MMT
		450	30,000	220,000	320,000	57	450MMT
		500	42,000	300,000	450,000	64	500MMT
		560	60,000	430,000	640,000	64	560MMT
		630	68,500	500,000	720,000	86	630MMT
		710	78,000	600,000	850,000	105	710MMT

Data sheets: 720024, 5785314 (FM), 5785313 (MT), 5785292 (FMM), 5785311 (MMT)