Square Body – Flush End Contact

690V/700V (IEC/U.L.) 40-2000A

Electrical Characteristics					Ordering Information						Curves
Size	Rated Current RMS-Amps	I^2t (A^2S) Pre-arc	I^2t (A^2S) Clearing at 660V	Losses at Rated Current	-B/- Visual Indicator	-BKN/- Type K Indicator for Micro	-G/- Visual Indicator	-GKN/- Type K Indicator for Micro	Carton Qty.	Carton Weight (kg)	BIF #
1*	40	40	270	9	170M3408	170M3458	170M3508	170M3558	10 (-B/-)	2.40	17056314
	50	77	515	11	170M3409	170M3459	170M3509	170M3559			
	63	115	770	14	170M3410	170M3460	170M3510	170M3560			
	80	185	1250	18	170M3411	170M3461	170M3511	170M3561			
	100	360	2450	21	170M3412	170M3462	170M3512	170M3562			
	125	550	3700	26	170M3413	170M3463	170M3513	170M3563	10 (-G/-)	2.40	
	160	1100	7500	30	170M3414	170M3464	170M3514	170M3564			
	200	2200	15000	35	170M3415	170M3465	170M3515	170M3565			
	250	4200	28500	40	170M3416	170M3466	170M3516	170M3566			
	315	7000	46500	50	170M3417	170M3467	170M3517	170M3567	6 (-BKN/-)	1.62	
	350	10000	68500	55	170M3418	170M3468	170M3518	170M3568			
	400	15000	105000	60	170M3419	170M3469	170M3519	170M3569			
	450	21000	140000	65	170M3420	170M3470	170M3520	170M3570			
	500	27000	180000	70	170M3421	170M3471	170M3521	170M3571	6 (-GKN/-)	1.62	
	550	34000	230000	75	170M3422	170M3472	170M3522	170M3572			
	630	48500	325000	80	170M3423	170M3473	170M3523	170M3573			
1	200	1650	11500	45	170M4408	170M4458	170M4508	170M4558	6	2.40	17056316
	250	3100	21000	55	170M4409	170M4459	170M4509	170M4559			
	315	6200	42000	58	170M4410	170M4460	170M4510	170M4560			
	350	8500	59000	60	170M4411	170M4461	170M4511	170M4561			
	400	13500	91500	65	170M4412	170M4462	170M4512	170M4562			
	450	17000	120000	70	170M4413	170M4463	170M4513	170M4563			
	500	25000	170000	72	170M4414	170M4464	170M4514	170M4564			
	550	34000	230000	75	170M4415	170M4465	170M4515	170M4565			
	630	52000	350000	80	170M4416	170M4466	170M4516	170M4566			
	700	69500	465000	85	170M4417	170M4467	170M4517	170M4567			
	800	105000	725000	95	170M4418	170M4468	170M4518	170M4568			
	‡900	155000	‡850000	100	170M4419	170M4469	170M4519	170M4569			
2	400	11000	74000	65	170M5408	170M5458	170M5508	170M5558	6	3.30	17056318
	450	15500	105000	70	170M5409	170M5459	170M5509	170M5559			
	500	21500	145000	75	170M5410	170M5460	170M5510	170M5560			
	550	28000	190000	80	170M5411	170M5461	170M5511	170M5561			
	630	41000	275000	90	170M5412	170M5462	170M5512	170M5562			
	700	60500	405000	95	170M5413	170M5463	170M5513	170M5563			
	800	86000	575000	105	170M5414	170M5464	170M5514	170M5564			
	900	125000	840000	110	170M5415	170M5465	170M5515	170M5565			
	1000	180000	1250000	115	170M5416	170M5466	170M5516	170M5566			
	1100	245000	1600000	120	170M5417	170M5467	170M5517	170M5567	4	2.4	
	1250	365000	2400000	130	170M5418	170M5468	170M5518	170M5568	4	2.4	
3	500	14000	95000	95	170M6408	170M6458	170M6508	170M6558	3	2.52	17056320
	550	19500	135000	100	170M6409	170M6459	170M6509	170M6559			
	630	31000	210000	105	170M6410	170M6460	170M6510	170M6560			
	700	44500	300000	110	170M6411	170M6461	170M6511	170M6561			
	800	69500	465000	115	170M6412	170M6462	170M6512	170M6562			
	900	100000	670000	120	170M6413	170M6463	170M6513	170M6563			
	1000	140000	945000	125	170M6414	170M6464	170M6514	170M6564			
	1100	190000	1300000	130	170M6415	170M6465	170M6515	170M6565			
	1250	290000	1950000	140	170M6416	170M6466	170M6516	170M6566			
	1400	370000	2450000	155	170M6417	170M6467	170M6517	170M6567			
	1500	460000	3100000	160	170M6418	170M6468	170M6518	170M6568			
	1600	580000	3900000	160	170M6419	170M6469	170M6519	170M6569	2	1.82	
	†1800	880000	†5250000	165	170M6420	170M6470	170M6520	170M6570	2	1.82	
	‡2000	1150000	‡6350000	175	170M6421	170M6471	170M6521	170M6571	2	1.82	

- Interrupting rating 200kA (Estimated 300kA) RMS Symmetrical.
- Watts loss provided at rated current.
- Rated voltage (IEC) †600V ‡550V (Consult Bussmann for U.L. Recognition / CSA Component Acceptance Status.)
- Microswitch indicator ordered separately.

1 kg = 2.2 lbs. 1 lb = 0.45 kg

Downloaded from Arrow.com.

Square Body – Flush End Contact

690V/700V (IEC/U.L.) 40-2000A

Electrical Characteristics

Total Clearing I^2t

The total clearing I^2t at rated voltage and at power factor of 15% are given in the electrical characteristics. For other voltages, the clearing I^2t is found by multiplying by correction factor, K, given as a function of applied working voltage, E_g, (RMS).

Arc Voltage

This curve gives the peak arc voltage, U_L, which may appear across the fuse during its operation as a function of the applied working voltage, E_g, (RMS) at a power factor of 15%.

Power Losses

Watts loss at rated current is given in the electrical characteristics. The curve allows the calculation of the power losses at load currents lower than the rated current. The correction factor, K_p, is given as a function of the RMS load current, I_b, in % of the rated current.

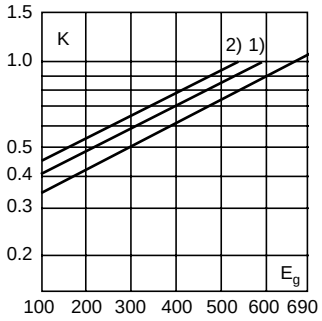

1) Rated voltage 600V
2) Rated voltage 550V

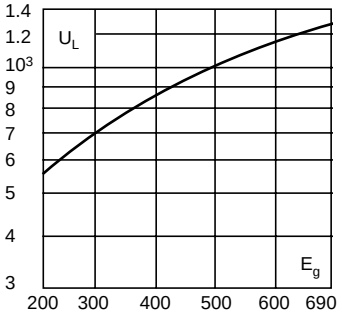

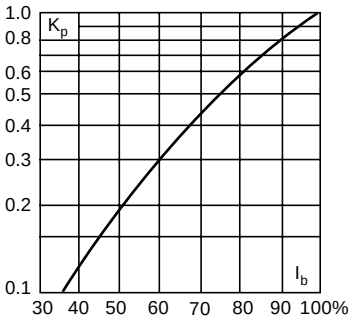

Dimensions

Flush End Contact: Type -B/-, -BKN/-, -G/-, -GKN/-

Size	A	B	D	E	F	F§	G	H
1*	50	51	59	45	M8	5/16″ - 18 UNC-2B	5	ø17
1	50	51	69	53	M8	5/16″ - 18 UNC-2B	8	ø20
2	50	51	77	61	M10	3/8″ - 16 UNC-2B	10	ø24
3	51	53	92	76	M12	1/2″ - 13 UNC-2B	10	ø30

§Valid for fuses type -G/- & -GKN/-

NB: B = 65 for Size 2, 1100-1250A Carton Quantity = 4 Carton Weight = 2.40 kg
Size 3, 1600-2000A Carton Quantity = 2 Carton Weight = 1.82 kg

Dimension in mm.
1mm = 0.0394″ 1″ = 25.4mm

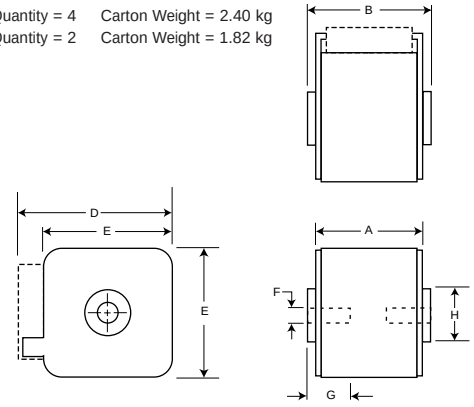

The only controlled copy of this BIF document is the electronic read-only version located on the Bussmann Network Drive. All other copies of this document are by definition uncontrolled. This bulletin is intended to clearly present comprehensive product data and provide technical information that will help the end user with design applications. Bussmann reserves the right, without notice, to change design or construction of any products and to discontinue or limit distribution of any products. Bussmann also reserves the right to change or update, without notice, any technical information contained in this bulletin. Once a product has been selected, it should be tested by the user in all possible applications.

Downloaded from Arrow.com.