CT, ET, FE, EET, FEE, FM, FMM, MT, MMT BS88 High speed fuses



Catalogue symbol

- (amps)CT (6 to 20 A)
- (amps)ET (25 to 80 A)
- (amps)FE (35 to 100 A)
- (amps)EET (90 to 160 A)
- (amps)FEE (100 to 200 A)
- (amps)FM (180 to 350 A)
- (amps)FMM (400 to 700 A)
- (amps)MT (160 to 355 A)
- (amps)MMT (180 to 710 A)

Description

BS88 style high speed fuse links.

Technical data

- Rated voltage

Catalogue numbers	IEC		UL	
	V a.c.	V d.c.	V a.c.	V d.c.
CT,	690	500	700	500
ET	690	500	700	500
FE	690	500	700	500
EET	690	500	700	700
FEE	690	500	700	500
FM	690	450	700	500
FMM	690	450	700	-
MT	690	350	700	-
MMT	690	350	700	-

- Rated current
  - 6 - 710 A
- Operating class: aR
- Breaking capacity

Catalogue numbers	IEC		UL	
	RMS Sym	DC at rated voltage	RMS Sym	DC at rated voltage
CT	90 kA	40 kA at 500 V d.c.	200 kA	50 kA at 500 V d.c.
ET	200 kA	50 kA at 500 V d.c.	200 kA	50 kA at 500 V d.c.
FE				
EET				
FEE				
FM	200 kA	40 kA at 450 V d.c.	200 kA	50 kA at 500 V d.c.
FMM	200 kA	40 kA at 450 V d.c.	200 kA	-
MT	200 kA	40 kA at 350 V d.c.	200 kA	-
MMT	200 kA		200 kA	-

Agency information

- CE
- Designed and tested to BS88 part 4
- IEC 60269 Part 4
- Consult fusetech@eaton.com for specific UL recognition status
- CCC for ET, FE, EET, FEE, FM and FMM

Features and benefits

- Excellent cycling capability and DC performance
- Low arc voltage and low energy let-through (I^2t)
- Low watts loss

Typical applications

- DC common bus
- DC drives
- Power converters/rectifiers
- Reduced voltage starters

Powering Business Worldwide

Carton quantity

- LCT and CT: 20 per carton
- LET, ET and FE: 10 per carton
- EET, FEE: 5 per carton
- LMT, LMMT, FM, FMM, MT and MMT: 1 per carton

Carton weight

- LCT: 0.11 kg
- LET: 0.31 kg
- LMT: 0.18 kg
- LMMT: 0.37 kg
- CT: 0.16 kg
- ET and FE: 0.42 kg
- EET, FEE and FMM: 0.45 kg
- FM: 0.24 kg
- MT: 0.26 kg
- MMT: 0.47 kg

Catalogue numbers	
6CT	180FM
10CT	200FM
12CT	225FM
16CT	250FM
20CT	280FM
25ET	315FM
32ET	350FM
35ET	400FMM
40ET	450FMM
45ET	500FMM
56ET	550FMM
63ET	630FMM
80ET	700FMM
35FE	160MT
40FE	180MT
45FE	200MT
50FE	250MT
63FE	280MT
71FE	315MT
80FE	355MT
90FE	180MMT
100FE	200MMT
90EET	225MMT
110EET	280MMT
140EET	315MMT
160EET	355MMT
100FEE	400MMT
120FEE	450MMT
140FEE	500MMT
160FEE	560MMT
180FEE	630MMT
200FEE	710MMT

Electrical characteristics

Total clearing I^2t

The total clearing I^2t at rated voltage and at a power factor of 15 percent are given in the electrical characteristics. For other voltages, the clearing I^2t is found by multiplying by correction factor, K, given as a function of applied working voltage, E_g, (RMS).

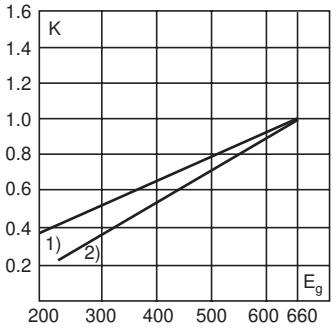

1) CT, ET, EET, FE, FEE, MT, MMT

2) FM, FMM

Arc voltage

This curve gives the peak arc voltage, U_L, which may appear across the fuse during its operation as a function of the applied working voltage, E_g, (RMS) at a power factor of 15 percent.

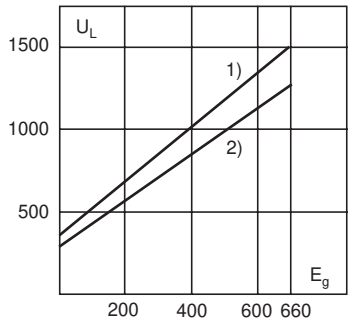

1) CT

2) ET, FE, EET, FEE, FM, FMM

Watts losses

Watts loss at rated current is given in the electrical characteristics. The curve allows the calculation of the watts losses at load currents lower than the rated current. The correction factor, K_p , is given as a function of the RMS load current, I_b , in percent of the rated current.

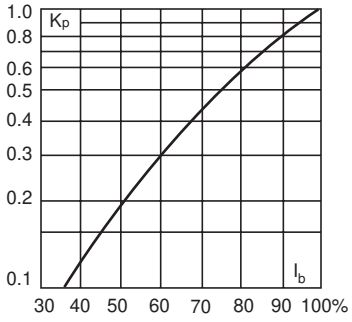

Technical data - CT, ET, FE, EET, FEE

Catalogue numbers	Rated voltage V a.c. / V d.c.	Rated current RMS-Amps	I^2t (A^2 Sec) Pre-arc	I^2t (A^2 Sec) Clearing at 415 V	I^2t (A^2 Sec) Clearing at 660 V	Watts loss**
6CT	690 V a.c. / 500 V d.c. (IEC)	6	1.8	8.5	12	2
10CT	700 V a.c. / 500 V d.c. (UL)	10	7	30	48	3
12CT		12	10	40	65	3
16CT		16	16	66	110	7
20CT		20	32	150	220	7
25ET	690 V a.c. / 500 V d.c. (IEC)	25	25	150	250	7
32ET	700 V a.c. / 500 V d.c. (UL)	32	32	190	350	11
35ET		35	52	310	500	11
40ET		40	103	600	900	9
45ET		45	103	680	1100	11
56ET		56	135	950	1500	14
63ET		63	171	1200	2000	16
80ET		80	360	2500	4000	18
35FE	690 V a.c. / 500 V d.c. (IEC)	35	33	130	200	9
40FE	700 V a.c. / 500 V d.c. (UL)	40	52	180	300	9
45FE		45	76	270	450	11
50FE		50	103	380	600	11
63FE		63	135	480	750	18.5
71FE		71	210	600	950	17
80FE		80	250	900	1500	20
90FE		90	360	1300	2100	20
100FE		100	470	1800	2800	23
90EET	690 V a.c. / 500 V d.c. (IEC)	90	490	3000	4500	19
110EET	700 V a.c. / 700 V d.c. (UL)	110	600	4000	6500	27
140EET		140	1050	7000	12,000	35
160EET		160	1500	10,000	17,000	39
100FEE	690 V a.c. / 500 V d.c. (IEC)	100	400	1600	2400	24
120FEE	700 V a.c. / 500 V d.c. (UL)	120	540	1900	3100	32
140FEE		140	850	2500	3800	36
160FEE		160	1000	3700	5700	46
180FEE		180	1400	5300	8400	46
200FEE		200	1900	7100	11,400	52

**Watts loss provided at rated current

Technical data - FM, FMM, MT and MMT

Catalogue numbers	Rated voltage V a.c. / V d.c.	Rated current RMS-Amps	I^2t (A^2 Sec) Pre-arc	I^2t (A^2 Sec) Clearing at 415 V	I^2t (A^2 Sec) Clearing at 660 V	Watts loss**
180FM	690 V a.c. / 450 V d.c. (IEC)	180	1400	7500	13,500	40
200FM	700 V a.c. / 500 V d.c. (UL)	200	2600	10,500	18,500	40
225FM		225	3700	14,500	26,500	44
250FM		250	5200	20,500	37,500	48
280FM		280	7000	30,500	55,000	48
315FM		315	10,000	40,000	77,000	55
350FM		350	15,000	60,000	105,000	55
400FMM	690 V a.c. / 450 V d.c. (IEC)	400	10,000	40,000	72,500	85
450FMM	700 V a.c. (UL)	450	15,000	60,000	105,000	90
500FMM		500	20,000	82,000	150,000	100
550FMM		550	30,000	120,000	215,000	100
630FMM		630	45,000	180,000	310,000	100
700FMM		700	60,000	245,000	420,000	120
160MT	690 V a.c. / 350 V d.c. (IEC)	160	2400	15,000	25,000	26
180MT	700 V a.c. (UL)	180	3800	25,000	38,000	26
200MT		200	6000	40,000	58,000	27
250MT		250	11,500	80,000	110,000	32
280MT		280	16,500	100,000	150,000	35
315MT		315	19,000	125,000	180,000	42
355MT		355	22,000	160,000	200,000	51
180MMT	690 V a.c. / 350 V d.c. (IEC)	180	1650	12,000	18,000	42
200MMT	700 V a.c. (UL)	200	2200	16,000	23,000	42
225MMT		225	3700	26,000	40,000	42
280MMT		280	6600	47,000	70,000	47
315MMT		315	8600	62,000	91,000	51
355MMT		355	13,500	97,000	140,000	54
400MMT		400	21,000	150,000	220,000	60
450MMT		450	30,000	220,000	320,000	57
500MMT		500	42,000	300,000	450,000	64
560MMT		560	60,000	430,000	640,000	64
630MMT		630	68,500	500,000	720,000	86
710MMT		710	78,000	600,000	850,000	105

**Watts loss provided at rated current

Dimensions - mm

CT

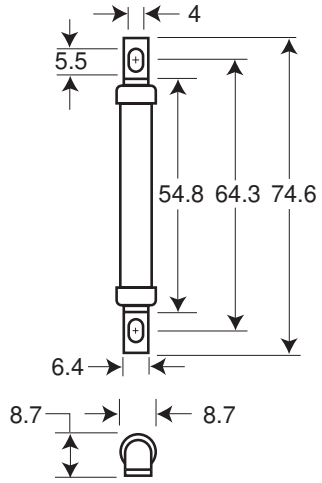

Indicator (optional)

ET, FE up to 63 A

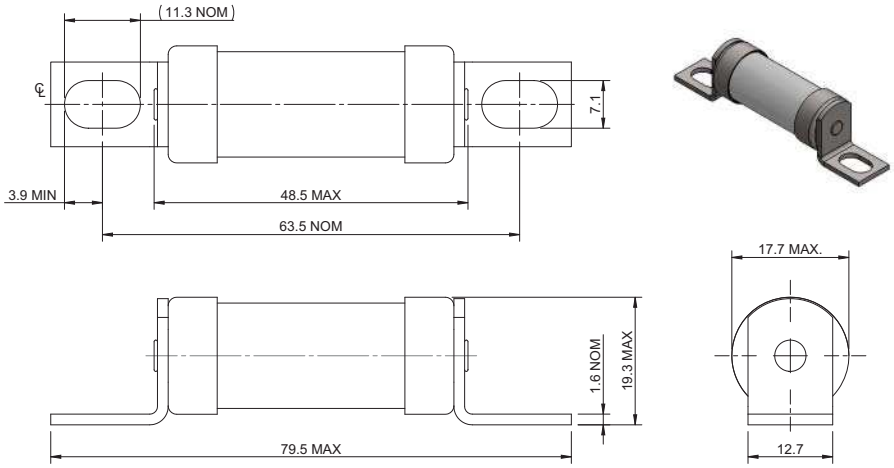

Indicator (optional)

ET, FE greater than 63 A

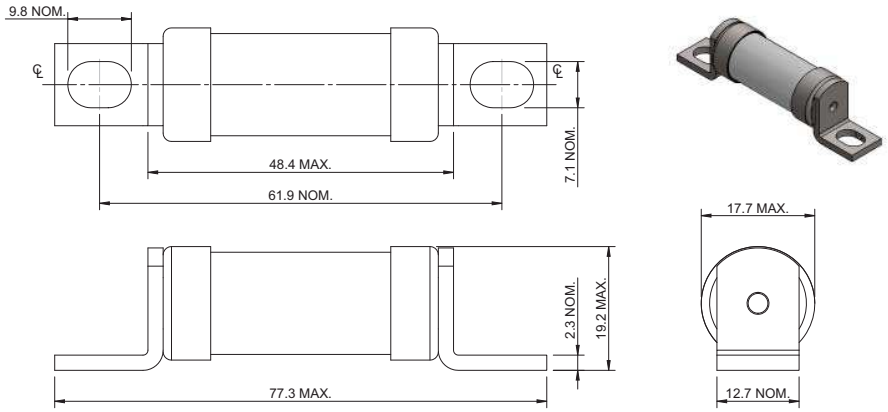

Indicator (optional)

EET, FEE

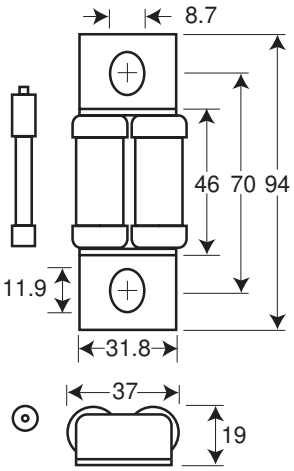

Indicator (optional)

FM, MT

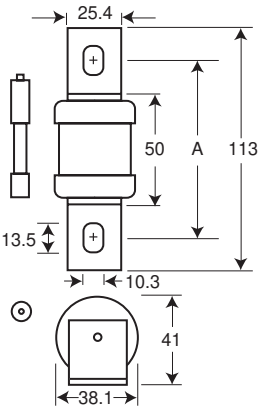

Indicator (optional)

FMM, MMT

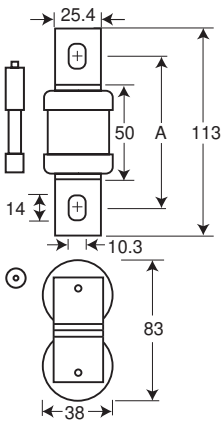

Indicator (optional)

Type	'A' Dimensions
FM	80-85
FMM	80-85
MT	85
MMT	85

Dimension in mm

1 mm = 0.0394" 1"= 25.4 mm