D and D0 fuse links and bases



Product description

Eaton's Bussmann® series Type D and D0 fuse links are specifically designed for the protection of general industrial applications such as power distribution and cable protection.

Both types D and D0 are available in three operating characteristics: Time-delay, Fast-acting and Ultra-rapid versions that fit into screw cap fuse link carriers for mounting in 1- or 3-pole DIN-Rail or screw fixing.

Features and benefits:

- Characteristics to suit the protection needs of inductive and resistive loads
- Fast trouble shooting with easily visible fuse operated pin indicator
- Historically reliable range
- Wide range of fuse bases and accessories available for many applications
- Compliant to IEC 60269 and DIN 49515

Powering Business Worldwide

Catalogue symbol - Type D fuse links

Fuse Link Size	Time-Delay	Fast-acting	Ultra-rapid
DI	(amp)D16	(amp)D16Q	(amp)D16R
DII	(amp)D27	(amp)D27Q	(amp)D27R
DIII	(amp)D33	(amp)D33Q	(amp)D33R
DIV	(amp)D125	(amp)D125Q	(amp)D125R
DV	(amp)D200	(amp)D200Q	(amp)D200R

Fuse size

- DI
- DII
- DIII
- DIV
- DV

To be used with fuse base

- E16 (DI)
- E27 (DII)
- E33 (DIII)
- R1 ¼" (DIV)
- R2 (DV)

Technical data

- Volts: 500 V a.c.
- Amps: 2 to 200 A
- Breaking capacity: 50 kA

Class of operation

- Time-delay
- Fast-acting
- Ultra-rapid

Standards/Approvals

- IEC 60269 and DIN 49515

Fuse bases and accessories (ordered separately)

- CD27 and CD33 Screw cap fuse link carriers
- GD27 and GD33 Screw cap gauge pieces
- SFD (1-pole) and TFD (3-pole) Fuse base screw fixing
- SFRD (1-pole) and TFRD (3-pole) Fuse base DIN-Rail mount

Weight

- D16: 12 - 16 grams
- D27: 27 - 30 grams
- D33: 48 - 52 grams
- D125: 105 - 109 grams
- D200: 215 grams

Table 1. Technical data

Current (Amps)	I^2t (Amp² seconds)	Nominal watts loss
2	33	1.5
4	52	1.6
6	100	1.8
10	160	1.4
16	460	2.1
20	1100	2.2
25	2000	3
35	4700	4.1
50	7800	5
63	12300	6.9
80	19000	N/A
100	29000	N/A
125	N/A	N/A
160	N/A	N/A
200	N/A	N/A

Table 2. Type D Catalogue numbers time delay and fast acting

Fuse link	Operating characteristics	Gauge ring colour	Fuse link size	To fit fuse base	Current (Amps)	Voltage (V a.c.)	B dimensions	Pack quantity
2D16	Time-delay	Pink	DI	E16	2	500	6	10
4D16	Time-delay	Brown	DI	E16	4	500	6	10
6D16	Time-delay	Green	DI	E16	6	500	6	10
10D16	Time-delay	Red	DI	E16	10	500	8	10
16D16	Time-delay	Grey	DI	E16	16	500	10	10
20D16	Time-delay	Blue	DI	E16	20	500	12	10
25D16	Time-delay	Yellow	DI	E16	25	500	14	10
2D27	Time-delay	Pink	DII	E27	2	500	6	25
4D27	Time-delay	Brown	DII	E27	4	500	6	25
6D27	Time-delay	Green	DII	E27	6	500	6	25
10D27	Time-delay	Red	DII	E27	10	500	8	25
16D27	Time-delay	Grey	DII	E27	16	500	10	25
20D27	Time-delay	Blue	DII	E27	20	500	12	25
25D27	Time-delay	Yellow	DII	E27	25	500	14	25
32D33	Time-delay	Black	DIII	E33	32	500	16	25
35D33	Time-delay	Black	DIII	E33	35	500	16	25
40D33	Time-delay	Black	DIII	E33	40	500	16	25
50D33	Time-delay	White	DIII	E33	50	500	18	25
63D33	Time-delay	Copper	DIII	E33	63	500	20	25
80D125	Time-delay	Silver	DIV	R1 ¼"	80	500	5	3
100D125	Time-delay	Red	DIV	R1 ¼"	100	500	7	3
125D200	Time-delay	Yellow	DV	R2	125	500	5	10
160D200	Time-delay	Copper	DV	R2	160	500	7	10
200D200	Time-delay	Blue	DV	R2	200	500	9	10
2D16Q	Fast acting	Pink	DI	E16	2	500	6	10
4D16Q	Fast acting	Brown	DI	E16	4	500	6	10
6D16Q	Fast acting	Green	DI	E16	6	500	6	10
10D16Q	Fast acting	Red	DI	E16	10	500	8	10
16D16Q	Fast acting	Grey	DI	E16	16	500	10	10
20D16Q	Fast acting	Blue	DI	E16	20	500	12	10
25D16Q	Fast acting	Yellow	DI	E16	25	500	14	10
2D27Q	Fast acting	Pink	DII	E27	2	500	6	25
4D27Q	Fast acting	Brown	DII	E27	4	500	6	25
6D27Q	Fast acting	Green	DII	E27	6	500	6	25
10D27Q	Fast acting	Red	DII	E27	10	500	8	25
16D27Q	Fast acting	Grey	DII	E27	16	500	10	25
20D27Q	Fast acting	Blue	DII	E27	20	500	12	25
25D27Q	Fast acting	Yellow	DII	E27	25	500	14	25
35D33Q	Fast acting	Black	DIII	E33	35	500	16	25
50D33Q	Fast acting	White	DIII	E33	50	500	18	25
63D33Q	Fast acting	Copper	DIII	E33	63	500	20	25
80D125Q	Fast acting	Silver	DIV	R1 ¼"	80	500	5	10
100D125Q	Fast acting	Red	DIV	R1 ¼"	100	500	7	10
125D200Q	Fast acting	Yellow	DV	R2	125	500	5	10
160D200Q	Fast acting	Copper	DV	R2	160	500	7	10
200D200Q	Fast acting	Blue	DV	R2	200	500	9	10

Table 3. Type D Catalogue numbers ultra rapid

Fuse link	Operating characteristics	Gauge ring colour	Fuse link size	To fit fuse base	Current (Amps)	Voltage (V a.c.)	B dimensions	Pack quantity
2D16R	Ultra rapid	Pink	DI	E16	2	500	6	20
4D16R	Ultra rapid	Brown	DI	E16	4	500	6	20
6D16R	Ultra rapid	Green	DI	E16	6	500	6	20
10D16R	Ultra rapid	Red	DI	E16	10	500	8	20
16D16R	Ultra rapid	Grey	DI	E16	16	500	10	20
20D16R	Ultra rapid	Blue	DI	E16	20	500	12	20
25D16R	Ultra rapid	Yellow	DI	E16	25	500	14	20
2D27R	Ultra rapid	Pink	DII	E27	2	500	6	25
4D27R	Ultra rapid	Brown	DII	E27	4	500	6	25
6D27R	Ultra rapid	Green	DII	E27	6	500	6	25
10D27R	Ultra rapid	Red	DII	E27	10	500	8	25
16D27R	Ultra rapid	Grey	DII	E27	16	500	10	25
20D27R	Ultra rapid	Blue	DII	E27	20	500	12	25
25D27R	Ultra rapid	Yellow	DII	E27	25	500	14	25
30D27R	Ultra rapid	Black	DII	E27	30	500	14	25
35D33R	Ultra rapid	Black	DIII	E33	35	500	16	25
50D33R	Ultra rapid	White	DIII	E33	50	500	18	25
63D33R	Ultra rapid	Copper	DIII	E33	63	500	20	25
80D125R	Ultra rapid	Silver	DIV	R1 ¼"	80	500	5	3
100D125R	Ultra rapid	Red	DIV	R1 ¼"	100	500	7	3
125D200R	Ultra rapid	Yellow	DV	R2	125	500	5	10
160D200R	Ultra rapid	Copper	DV	R2	160	500	7	10
200D200R	Ultra rapid	Blue	DV	R2	200	500	9	10

Dimensions - mm

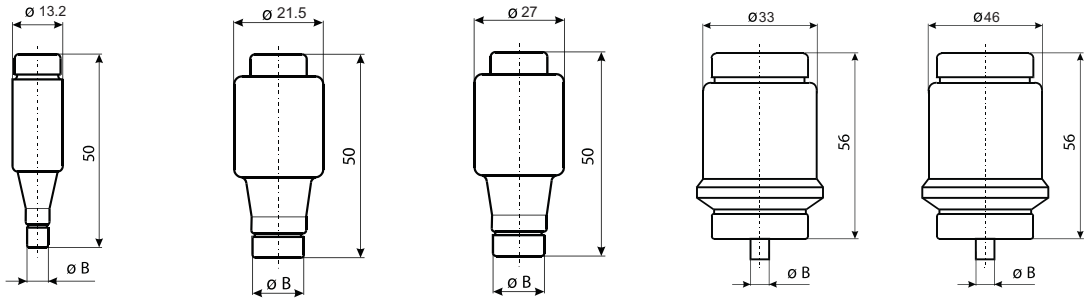

DI DII DIII DIV DV

Time-current curve - Type D Fuse links

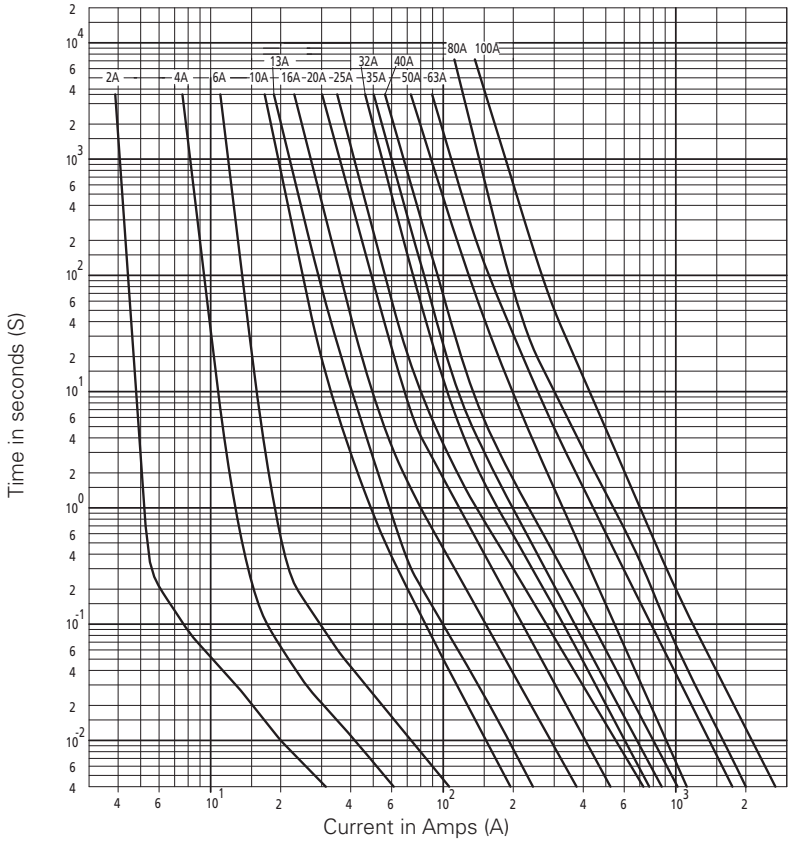

Cut-off characteristics - Type D Fuse links

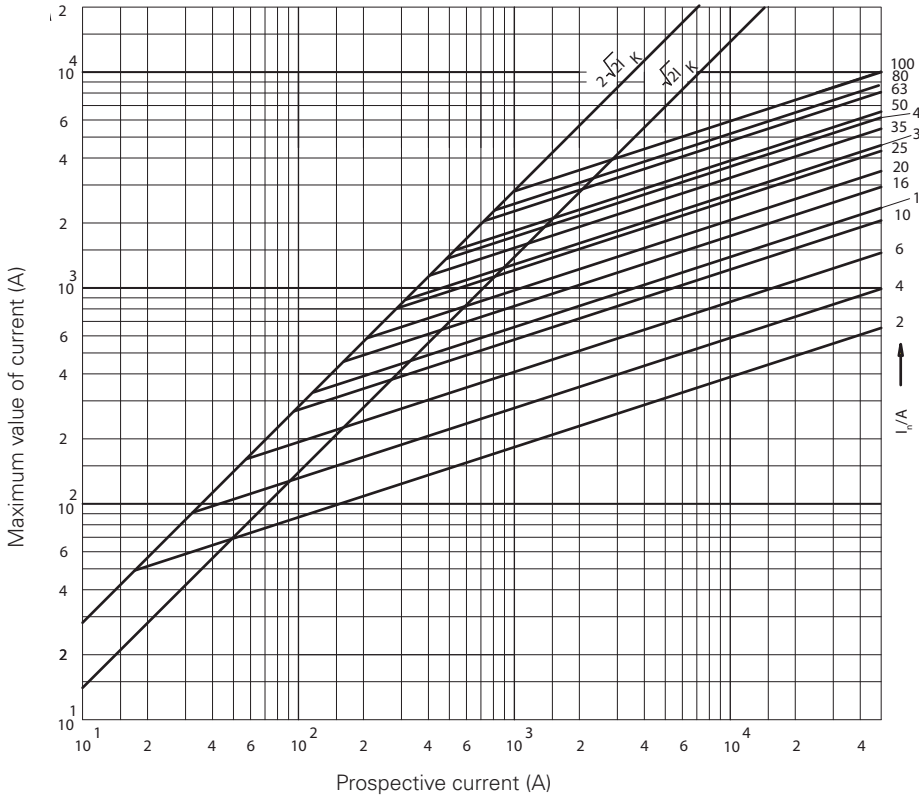

D and D0 fuse links and bases

Accessories for type D Fuse links

Table 4. Screw cap fuse links carriers
Screws into fuse base.

Catalogue number	Fuse link size	To fit fuse base type	Current (Amps)	Pack qty
CD27	DII	E27	25	50
CD33	DIII	E33	63	30



CD27

Dimensions - mm

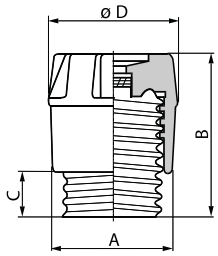

Fuse carrier/cap

Rated current (Amps)	A	B	C	D
CD27	E27	44	12	34
CD33	E33	44	12	43

Table 5. Screw cap gauge pieces
Fuse rating rejection insert to prevent incorrect fuse rating from being installed.

Catalogue number	Colour	Current (Amps)	Fuse link size	To fit fuse base type	Pack qty
2GD27	Pink	2	DII	E27	25
4GD27	Brown	4	DII	E27	25
6GD27	Green	6	DII	E27	25
10GD27	Red	10	DII	E27	25
16GD27	Grey	16	DII	E27	25
20GD27	Blue	20	DII	E27	25
25GD27	Yellow	25	DII	E27	25
35GD33	Black	35	DIII	E33	25
50GD33	White	50	DIII	E33	25
63GD33	Copper	63	DIII	E33	25

Dimensions - mm

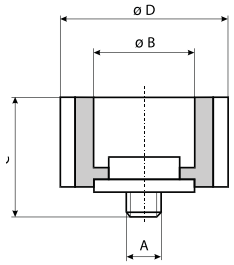

Gauge piece

Rated current (Amps)	A	B	C	D
2GD27	3/16"	6.5	17	24
4GD27	3/16"	6.5	17	24
6GD27	3/16"	6.5	17	24
10GD27	3/16"	8.5	17	24
16GD27	3/16"	10.5	17	24
20GD27	3/16"	12.5	17	24
25GD27	3/16"	14.5	17	24
35GD33	3/16"	16.5	17	30
50GD33	3/16"	18.5	17	30
63GD33	3/16"	20.5	17	30



2GD27



4GD27



6GD27



10GD27



16GD27



20GD27



25GD27



35GD33



50GD33



63GD33

Table 6. Fuse base screw fixing
Panel mount receptacle to hold screw cap fuse link carrier and fuse link.

Catalogue number	Number of poles	Fuse link size	To fit fuse base type	Current (Amps)	Pack qty
TFD27	3-pole	DII	E27	25	4
TFD33	3-pole	DIII	E33	63	6



TFD27

Dimensions - mm

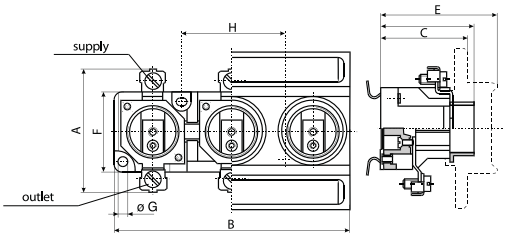

Rated current (Amps)	A	B	C	D	E	F	G	H
TFD27	41	121	44	47	60	30	4.3	50
TFD33	43	148	44	47	56	32	4.3	62

TFD

Table 7. Fuse base DIN-Rail mount
DIN-Rail mount receptacle to hold screw cap fuse link carrier and fuse link.

Catalogue number	Number of poles	Fuse link size	To fit fuse base type	Current (Amps)	Pack qty
SFRD27	1-pole	DII	E27	25	15
TFRD27	3-pole	DII	E27	25	4
SFRD33	1-pole	DIII	E33	63	15
TFRD33	3-pole	DIII	E33	63	6



SFRD33



TFRD27

Dimensions - mm

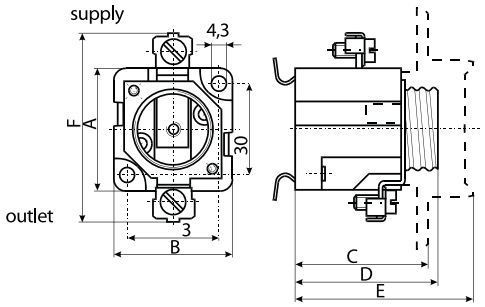

Rated current (Amps)	A	B	C	D	E	F
SFRD27	41	39	44	47	60	62
SFRD33	43	47	44	47	56	79

SFRD

Dimensions - mm

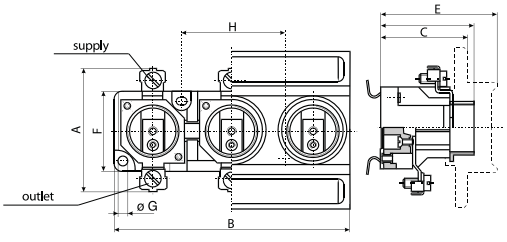

Rated current (Amps)	A	B	C	D	E	F	G	H
TFRD27	41	121	44	47	60	30	4.3	50
TFRD33	43	148	44	47	56	32	4.3	62

TFRD

D and D0 fuse links and bases

Fitting example



CD27
Screw cap fuse link carrier

+



10GD27
Screw cap gauge piece

+



10D27
Fuse link

+



TFD27
Fuse base panel mount

Catalogue symbol - Type D0 fuse links

Fuse link size	Time-delay	Ultra-rapid
D01	(amp)NZ01	(amp)NZ01R
D02	(amp)NZ02	(amp)NZ02R
D03	(amp)NZ03	N/A

Fuse size

- D01
- D02
- D03

To be used with fuse base

- E14 (D01)
- E18 (D02)
- M30 x 2 (D03)

Technical data

- Volts: 400 V a.c.
- Amps: 2 to 100 A
- Breaking capacity: 50 kA

Operating class

- Time-delay
- Ultra-rapid

Standards/Approvals

- IEC 60269 and DIN 49515

Packaging

- 10 per carton

Weight

- NZ01: 6 grams
- NZ02: 11 - 15 grams
- NZ03: 35 grams

Table 8. Technical data

Current (Amps)	I^2t (Amp² seconds)	Nominal watts loss
2	33	0.8
4	52	1.1
6	100	1.2
10	160	1.1
16	460	1.7
20	1100	1.7
25	2000	2.3
35	4700	2.8
50	7800	3.8
63	12300	5

Fuse bases and accessories (ordered separately)

- CN01, CN02 and CN03 screw cap fuse link carriers
- GN01 and GN02 screw cap gauge pieces
- FN_C, FRNC-SA, FRN-SB, FRN-SD, FRN-SE single pole fuse base screw fixing
- TFN_C, TFRNC-SA, TFRN-SB, TFRN-SD, TFRN-SE triple pole fuse base screw fixing
- FRN_C, FRNC-A, FRN-B, FRN-D, FRN-E single pole fuse base DIN-Rail mounting
- TFRN_C, TFRNC-A, TFRN-B, TFRN-D, TFRN-E triple pole fuse base DIN-Rail mounting
- PPD01 and PPD02 Plastic base
- D0-GPK gauge piece key
- D0-SFH special holder

Dimensions - mm

See catalogue numbers table for dimension ∅A.

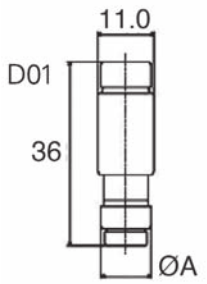

Use with fuse base E14

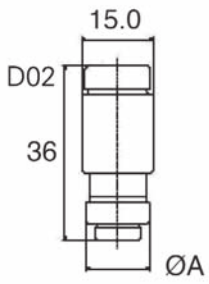

Use with fuse base E18

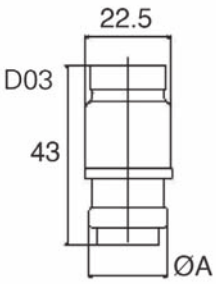

Use with fuse base M30 x 2

D and D0 fuse links and bases

Table 9. Type D0 fuse link catalogue numbers

Catalogue numbers	Operating characteristics	Gauge ring colour	Fuse link size	To fit fuse base	Current (Amps)	Voltage (V a.c.)	∅ A dimensions	Pack qty
2NZ01	Time delay	Pink	D01	E14	2	400	7.3	10
4NZ01	Time delay	Brown	D01	E14	4	400	7.3	10
6NZ01	Time delay	Green	D01	E14	6	400	7.3	10
10NZ01	Time delay	Red	D01	E14	10	400	8.5	10
16NZ01	Time delay	Grey	D01	E14	16	400	9.7	10
20NZ02	Time delay	Blue	D02	E18	20	400	10.9	10
25NZ02	Time delay	Yellow	D02	E18	25	400	12.1	10
35NZ02	Time delay	Black	D02	E18	35	400	13.3	10
50NZ02	Time delay	White	D02	E18	50	400	14.5	10
63NZ02	Time delay	Copper	D02	E18	63	400	15.9	10
80NZ03	Time delay	Silver	D03	M30 x 2	80	400	21.4	10
100NZ03	Time delay	Red	D03	M30 x 2	100	400	21.4	10
2NZ01R	Ultra rapid	Pink	D01	E14	2	400	7.3	10
4NZ01R	Ultra rapid	Brown	D01	E14	4	400	7.3	10
6NZ01R	Ultra rapid	Green	D01	E14	6	400	7.3	10
10NZ01R	Ultra rapid	Red	D01	E14	10	400	8.5	10
16NZ01R	Ultra rapid	Grey	D01	E14	16	400	9.7	10
20NZ02R	Ultra rapid	Blue	D02	E18	20	400	10.9	10
25NZ02R	Ultra rapid	Yellow	D02	E18	25	400	12.1	10
35NZ02R	Ultra rapid	Black	D02	E18	35	400	13.3	10
50NZ02R	Ultra rapid	White	D02	E18	50	400	14.5	10
63NZ02R	Ultra rapid	Copper	D02	E18	63	400	15.9	10

D and D0 fuse links and bases

Time-current curve - Type D0 fuse links - Time-delay

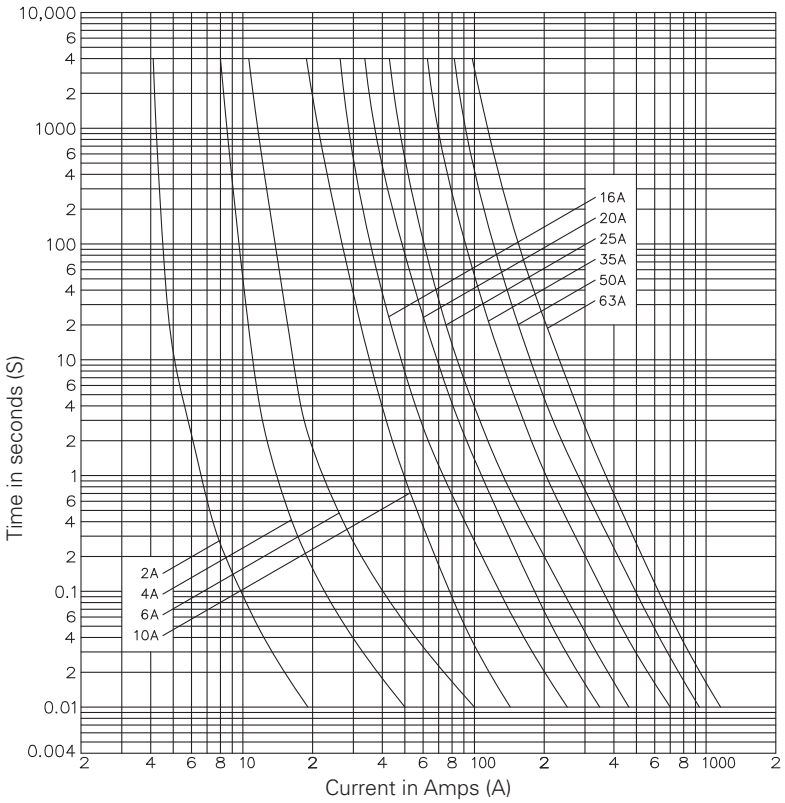

Cut-off characteristics - Type D0 Fuse link - Time-delay and Ultra-rapid

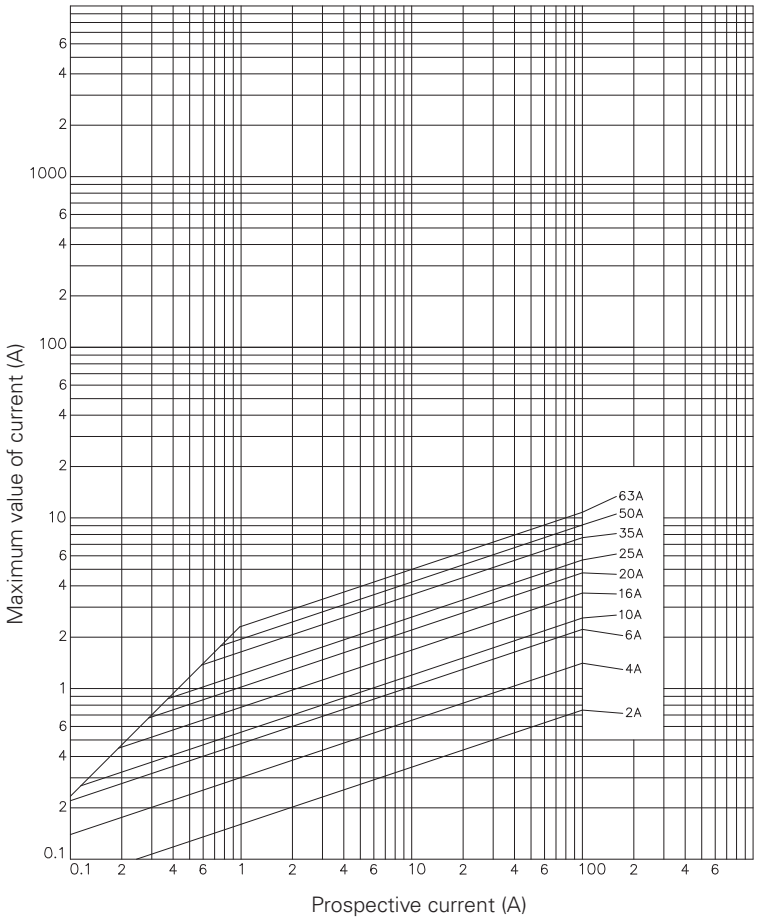

Accessories for type D0 Fuse links

Table 10. Fuse cap fuse link carriers
Screws into fuse base.

Catalogue number	Fuse link size	Pack qty
CN01	D01	20
CN02	D02	20
CN03	D03	20



CN01

Dimensions - mm

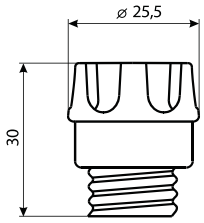

Fuse carrier/cap

Table 11. Screw cap gauge pieces
Fuse rating rejection insert to prevent incorrect fuse rating from being installed.

Catalogue number	Colour	Current (Amps)	Fuse link size	To fit fuse base type	Pack qty	Dimensions A	Dimensions B
2GN01	Pink	2	D01	E14	50	7.9	12
4GN01	Brown	4	D01	E14	50	7.9	12
6GN01	Green	6	D01	E14	50	7.9	12
10GN01	Red	10	D01	E14	50	9.1	12
2GN02*	Pink	2	D02	E18	50	7.9	16.6
4GN02*	Brown	4	D02	E18	50	7.9	16.6
6GN02*	Green	6	D02	E18	50	7.9	16.6
10GN02*	Red	10	D02	E18	50	9.1	16.6
16GN02*	Grey	16	D02	E18	50	10.3	16.6
20GN02	Blue	20	D02	E18	50	11.5	16.6
25GN02	Yellow	25	D02	E18	50	12.7	16.6
35GN02	Black	35	D02	E18	50	13.9	16.6
50GN02	White	50	D02	E18	50	15.1	16.6

* For using fuse links D01 and fuse bases D02

Dimensions - mm

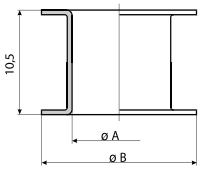



2GN01



4GN01



6GN01



10GN01



16GN02



20GN02



25GN02



35GN02



50GN02

Table 12. Single pole fuse base
Panel mount receptacle to hold screw cap fuse link carrier and fuse link.

Catalogue number	Current (Amps)	Screw	With protection cover	Without protection cover	DIN-Rail mounting	Screw fixing	Connections Outlet	Supply	Cross-section of connecting lead (mm²)	Dim (A) mm	Pack qty
FRN01C	16	E14	x		x		M4	M4	1.5-4	53	15
FN01C	16	E14	x			x	M4	M4	1.5-4	53	15
FRN02C	63	E18	x		x		2 x M5	2 x M5	2.5-25	57	15
FN02C	63	E18	x			x	2 x M5	2 x M5	2.5-25	57	15
FRN02C-A	63	E18	x		x		2 x M5	M6	2.5-25	57	5
FRN02C-SA	63	E18	x			x	2 x M5	M6	2.5-25	57	15
FRN01-B	16	E14		x	x		M4	M4	1.5-4	53	15
FRN01-SB	16	E14		x		x	M4	M4	1.5-4	53	15
FRN02-D	63	E18		x	x		2 x M5	2 x M5	2.5-25	57	5
FRN02-SD	63	E18		x		x	2 x M5	2 x M5	2.5-25	57	15
FRN02-E	63	E18		x	x		2 x M5	M6	2.5-25	57	15
FRN02-SE	63	E18		x		x	2 x M5	M6	2.5-25	57	15

Dimensions - mm

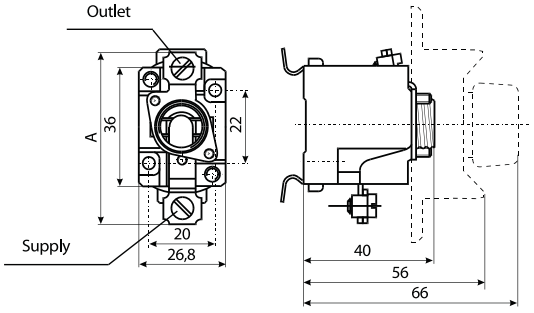


FN01C


FRN01C

Table 13. Three pole fuse base
Panel mount receptacle to hold screw cap fuse link carrier and fuse link.

Catalogue number	Current (Amps)	Screw	With protection cover	Without protection cover	DIN-Rail mounting	Screw fixing	Connections Outlet	Supply	Cross-section of connecting lead (mm²)	Dim (A) (mm)	Pack qty
TFRN01C	16	E14	x		x		M4	M4	1.5-4	53	5
TFN01C	16	E14	x			x	M4	M4	1.5-4	53	5
TFRN02C	63	E18	x		x		2 x M5	2 x M5	2.5-25	57	5
TFN02C	63	E18	x			x	2 x M5	2 x M5	2.5-25	57	5
TFRN02C-A	63	E18	x		x		2 x M5	M6	2.5-25	57	5
TFRN02C-SA	63	E18	x			x	2 x M5	M6	2.5-25	57	5
TFRN01-B	16	E14		x	x		M4	M4	1.5-4	53	5
TFRN01-SB	16	E14		x		x	M4	M4	1.5-4	53	5
TFRN02-D	63	E18		x	x		2 x M5	2 x M5	2.5-25	57	5
TFRN02-SD	63	E18		x		x	2 x M5	2 x M5	2.5-25	57	5
TFRN02-E	63	E18		x	x		2 x M5	M6	2.5-25	57	5
TFRN02-SE	63	E18		x		x	2 x M5	M6	2.5-25	57	5

Dimensions - mm

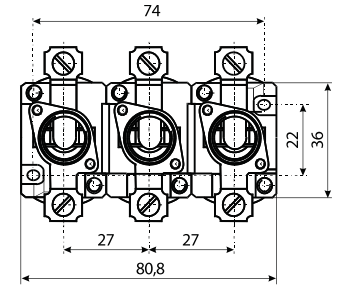

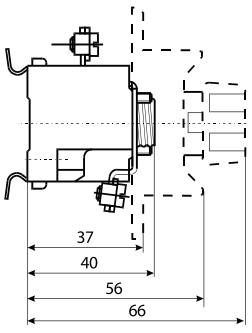


TFRN02C

Accessories for type D0 Fuse links

Table 14. Plastic base PDD01 and PDD02

Type	Catalogue number	To fit fuse link	Number of poles	Rated current (A)	Dim B (mm)	Pack qty
PPD01-1	PDD01-1	D01	1	16	26.8	1
PPD01-3	PDD01-3	D01	3	16	80.4	3
PPD02-1	PDD02-1	D02	1	63	26.8	15
PPD02-3	PDD02-3	D02	3	63	80.4	5

Dimensions - mm

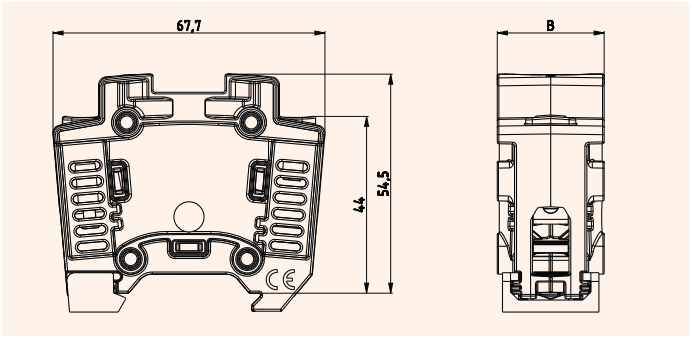

Table 15. Gauge piece key

Catalogue number	Pack qty	MOQ
D0-GPK	20	20



Table 16. Special holder

Catalogue number	Pack qty
D0-SFH	25



Fitting example



CN01
Fuse cap fuse link carrier

16GN02
Screw cap gauge ring

16NZ01
Fuse link

FRN02C
DIN-Rail fuse mount

Changes to the products, to the information contained in this document, and to prices are reserved; so are errors and omissions. Only order confirmations and technical documentation by Eaton is binding. Photos and pictures also do not warrant a specific layout or functionality. Their use in whatever form is subject to prior approval by Eaton. The same applies to Trademarks (especially Eaton, Moeller, and Cutler-Hammer). The Terms and Conditions of Eaton apply, as referenced on Eaton Internet pages and Eaton order confirmations.

Eaton
EMEA Headquarters
Route de la Longeraie 7
1110 Morges, Switzerland

Eaton Electrical Products Limited
Melton Road
Burton-on-the-Wolds
Leicestershire, LE12 5TH
United Kingdom

© 2017 Eaton
All Rights Reserved
PDF Only
Publication No. 4124
October 2017

Powering Business Worldwide

Eaton is a registered trademark.

All other trademarks are property of their respective owners.