Protistor® size 33 aR

450 to 690VAC (IEC) / 700VAC (UL)

SEMICONDUCTOR PROTECTION FUSES

SQUARE BODY HIGH-SPEED FUSE-LINKS AC PROTECTION



The 690/700V Protistor® fuse-links provide maximum flexibility in equipment design and ultimate protection for today's power conversion equipment. These aR ultra-fast acting square body fuse-links are available in different body sizes, each size having multiple worldwide acceptable mounting styles.

The Protistor® have been engineered to provide state-of-the-art protection for semiconductors: diodes, thyristors and IGBT devices. Fuses are assembled with die-cut elements embedded in solidified sand, which helps control arcing characteristics for a lower I^2t and high interrupting rating level. All contact surfaces are silver plated and all hardware is non-magnetic.

Each fuse-link can be equipped with a low voltage trip-indicator which can operate a field mountable microswitch.

TECHNICAL DATA OVERVIEW

Voltage Range AC	450 ... 690 VAC
Ampere Range (A)	450 ... 2500 A
Speed/Characteristic	aR
I.R. AC	110 ... 200 kA
Product Size	33

FEATURES & BENEFITS

- Multiple body sizes and terminals or blades combination
- aR Class according to IEC 60269-4 and VDE 636-23
- Very low I^2t for improved semiconductor protection
- Ultra fast acting
- Current limiting
- Superior cycling capability

APPLICATIONS

- Protection of inverters, motor drives, UPS systems and similar 690V or less equipments.

STANDARDS

- IEC 60269-4 Compliance
- UL/CSA Recognized E76491 : see « UL certified » status given in Product Range table
- CCC GB 13539.4 for Asian market only

© 2024 Mersen products have been designed by Mersen for a range of specific applications to be operated depending on particular specification and conditions. Mersen makes no representation or/and warranty, and waives any liability, either express or implied for products' reliability and life time or technical performance in case Mersen has not been provided with customer's specifications or if the products are not purchased directly from Mersen or its distributors and/or agents.

PRODUCT RANGE



PC33UD69V1400TF

Size 33 type TTF M12 threaded terminals

Catalog number	Item number	Rated voltage AC (IEC)	Rated voltage AC (UL)	Rated current I_n	Pre-arcing I^2t	Clearing I^2t at Rated Voltage	Rated breaking capacity AC	Power dissipation at I_n	UL certified	Package	Weight
Standard Terminal											
PC33UD69V450TF	W302170	690 V	700 V	450 A	13.45 kA²s	87 kA²s	200 kA	84 W	✓	3	0.81 kg
PC33UD69V500TF	V300076	690 V	700 V	500 A	19 kA²s	110 kA²s	200 kA	105 W	✓	3	0.81 kg
PC33UD69V550TF	W300077	690 V	700 V	550 A	27 kA²s	155 kA²s	200 kA	105 W	✓	3	0.81 kg
PC33UD69V630TF	X300078	690 V	700 V	630 A	40 kA²s	230 kA²s	200 kA	110 W	✓	3	0.81 kg
PC33UD69V700TF	Y300079	690 V	700 V	700 A	57 kA²s	330 kA²s	200 kA	115 W	✓	3	0.81 kg
PC33UD69V800TF	Z300080	690 V	700 V	800 A	93 kA²s	540 kA²s	200 kA	120 W	✓	3	0.81 kg
PC33UD69V900TF	A300081	690 V	700 V	900 A	130 kA²s	770 kA²s	200 kA	120 W	✓	3	0.81 kg
PC33UD69V1000TF	B300082	690 V	700 V	1000 A	170 kA²s	990 kA²s	200 kA	135 W	✓	3	0.81 kg
PC33UD69V1100TF	C300083	690 V	700 V	1100 A	240 kA²s	1390 kA²s	200 kA	135 W	✓	3	0.81 kg
Reinforced Terminal											
PC33UD69V1250TF	D300084	690 V	700 V	1250 A	355 kA²s	2053 kA²s	200 kA	150 W	✓	3	0.81 kg
PC33UD69V1400TF	E300085	690 V	700 V	1400 A	465 kA²s	2700 kA²s	200 kA	160 W	✓	3	0.81 kg
PC33UD60V1500TF	Y300585	600 V	650 V	1500 A	470 kA²s	2500 kA²s	200 kA	210 W	✓	3	0.81 kg
PC33UD60V1600TF	Z300586	600 V	650 V	1600 A	555 kA²s	2900 kA²s	200 kA	210 W	✓	3	0.81 kg
PC33UD60V1800TF	A300587	600 V	650 V	1800 A	720 kA²s	3870 kA²s	200 kA	225 W	✓	3	0.81 kg
PC33UD55V2000TF	B300588	550 V	600 V	2000 A	950 kA²s	4500 kA²s	200 kA	250 W	✓	3	0.81 kg
PC33UD50V2250TF	K300757	500 V	550 V	2250 A	1250 kA²s	5160 kA²s	200 kA	280 W	✓	3	0.81 kg
PC33UD45V2500TF	L300758	450 V	500 V	2500 A	1870 kA²s	6540 kA²s	200 kA	280 W	✓	3	0.81 kg

© 2024 Mersen products have been designed by Mersen for a range of specific applications to be operated depending on particular specification and conditions. Mersen makes no representation or/and warranty, and waives any liability, either express or implied for products' reliability and life time or technical performance in case Mersen has not been provided with customer's specifications or if the products are not purchased directly from Mersen or its distributors and/or agents.

PRODUCT RANGE



A070UD33TTI450

Size 33 type TTI 1/2in - 13 unified coarse threaded terminals

Catalog number	Item number	Rated voltage AC (IEC)	Rated voltage AC (UL)	Rated current I_n	Pre-arcing I^2t	Clearing I^2t at Rated Voltage	Rated breaking capacity AC	Power dissi-pation at I_n	UL certified	Package	Weight
Standard Terminal											
A070UD33TTI450	X302171	690 V	700 V	450 A	13.45 kA²s	87 kA²s	200 kA	84 W	✓	3	0.89 kg
A070UD33TTI500	X300446	690 V	700 V	500 A	19 kA²s	110 kA²s	200 kA	105 W	✓	3	0.89 kg
A070UD33TTI550	Y300447	690 V	700 V	550 A	27 kA²s	155 kA²s	200 kA	105 W	✓	3	0.89 kg
A070UD33TTI630	Z300448	690 V	700 V	630 A	40 kA²s	230 kA²s	200 kA	110 W	✓	3	0.89 kg
A070UD33TTI700	A300449	690 V	700 V	700 A	57 kA²s	330 kA²s	200 kA	115 W	✓	3	0.89 kg
A070UD33TTI800	T300443	690 V	700 V	800 A	93 kA²s	540 kA²s	200 kA	120 W	✓	3	0.89 kg
A070UD33TTI900	B300450	690 V	700 V	900 A	130 kA²s	770 kA²s	200 kA	120 W	✓	3	0.89 kg
A070UD33TTI1000	C300451	690 V	700 V	1000 A	170 kA²s	990 kA²s	200 kA	135 W	✓	3	0.89 kg
A070UD33TTI1100	D300452	690 V	700 V	1100 A	240 kA²s	1390 kA²s	200 kA	135 W	✓	3	0.89 kg
Reinforced Terminal											
A070UD33TTI1250	E300453	690 V	700 V	1250 A	355 kA²s	2053 kA²s	200 kA	150 W	✓	3	0.89 kg
A070UD33TTI1400	F300454	690 V	700 V	1400 A	465 kA²s	2700 kA²s	200 kA	160 W	✓	3	0.89 kg
A065UD33TTI1500	F302064	600 V	650 V	1500 A	470 kA²s	2500 kA²s	200 kA	210 W	✓	3	0.89 kg
A065UD33TTI1600	S301086	600 V	650 V	1600 A	555 kA²s	2900 kA²s	200 kA	210 W	✓	3	0.89 kg
A065UD33TTI1800	T301087	600 V	650 V	1800 A	720 kA²s	3870 kA²s	200 kA	225 W	✓	3	0.89 kg
A060UD33TTI2000	V301088	550 V	600 V	2000 A	950 kA²s	4500 kA²s	200 kA	250 W	✓	3	0.89 kg
A055UD33TTI2250	W301089	500 V	550 V	2250 A	1250 kA²s	5160 kA²s	200 kA	280 W	✓	3	0.89 kg
A050UD33TTI2500	Y300838	450 V	500 V	2500 A	1870 kA²s	6540 kA²s	200 kA	280 W	✓	3	0.89 kg

© 2024 Mersen products have been designed by Mersen for a range of specific applications to be operated depending on particular specification and conditions. Mersen makes no representation or/and warranty, and waives any liability, either express or implied for products' reliability and life time or technical performance in case Mersen has not been provided with customer's specifications or if the products are not purchased directly from Mersen or its distributors and/or agents.

PRODUCT RANGE



PC33UD69V1100A

Size 33 type DIN80 blades

Catalog number	Item number	Rated voltage AC (IEC)	Rated voltage AC (UL)	Rated current I_n	Pre-arcing I^2t	Clearing I^2t at Rated Voltage	Rated breaking capacity AC	Power dissipation at I_n	UL certified	Package	Weight
Standard Terminal											
PC33UD69V450A	T302168	690 V	700 V	450 A	13.45 kA²s	87 kA²s	200 kA	88 W	✓	3	0.81 kg
PC33UD69V500A	G300248	690 V	700 V	500 A	19 kA²s	110 kA²s	200 kA	105 W	✓	3	0.81 kg
PC33UD69V550A	H300249	690 V	700 V	550 A	27 kA²s	155 kA²s	200 kA	110 W	✓	3	0.81 kg
PC33UD69V630A	J300250	690 V	700 V	630 A	40 kA²s	230 kA²s	200 kA	120 W	✓	3	0.81 kg
PC33UD69V700A	K300251	690 V	700 V	700 A	57 kA²s	330 kA²s	200 kA	125 W	✓	3	0.81 kg
PC33UD69V800A	L300252	690 V	700 V	800 A	93 kA²s	540 kA²s	200 kA	130 W	✓	3	0.81 kg
PC33UD69V900A	M300253	690 V	700 V	900 A	130 kA²s	770 kA²s	200 kA	135 W	✓	3	0.81 kg
PC33UD69V1000A	N300254	690 V	700 V	1000 A	170 kA²s	990 kA²s	200 kA	155 W	✓	3	0.81 kg
PC33UD69V1100A	P300255	690 V	700 V	1100 A	240 kA²s	1390 kA²s	200 kA	160 W	✓	3	0.81 kg
Reinforced Terminal											
PC33UD69V1250A	Q300256	690 V	700 V	1250 A	355 kA²s	2053 kA²s	200 kA	180 W	✓	3	0.81 kg
PC33UD69V1400A	R300257	690 V	700 V	1400 A	465 kA²s	2700 kA²s	200 kA	200 W	✓	3	0.81 kg
PC33UD60V1500A	M235071	600 V	650 V	1500 A	470 kA²s	2500 kA²s	200 kA	210 W	✓	3	0.81 kg
PC33UD60V1600A	X301803	600 V	650 V	1600 A	555 kA²s	2900 kA²s	200 kA	240 W	✓	3	0.81 kg
PC33UD60V1800A	E301971	600 V	650 V	1800 A	720 kA²s	3870 kA²s	200 kA	225 W	✓	3	0.81 kg
PC33UD55V2000A	A302657	550 V	600 V	2000 A	950 kA²s	4500 kA²s	200 kA	250 W	✓	3	0.81 kg



PC33UD69V11CD1A

Size 33 type DIN110 blades

Catalog number	Item number	Rated voltage AC (IEC)	Rated voltage AC (UL)	Rated current I_n	Pre-arcing I^2t	Clearing I^2t at Rated Voltage	Rated breaking capacity AC	Power dissipation at I_n	UL certified	Package	Weight
Standard Terminal											
PC33UD69V450D1A	V302169	690 V	700 V	450 A	13.45 kA²s	87 kA²s	200 kA	88 W	✓	3	0.87 kg
PC33UD69V500D1A	S300258	690 V	700 V	500 A	19 kA²s	110 kA²s	200 kA	105 W	✓	3	0.87 kg
PC33UD69V550D1A	T300259	690 V	700 V	550 A	27 kA²s	155 kA²s	200 kA	110 W	✓	3	0.87 kg
PC33UD69V630D1A	V300260	690 V	700 V	630 A	40 kA²s	230 kA²s	200 kA	120 W	✓	3	0.87 kg
PC33UD69V700D1A	W300261	690 V	700 V	700 A	57 kA²s	330 kA²s	200 kA	125 W	✓	3	0.87 kg
PC33UD69V800D1A	X300262	690 V	700 V	800 A	93 kA²s	540 kA²s	200 kA	130 W	✓	3	0.87 kg
PC33UD69V900D1A	Y300263	690 V	700 V	900 A	130 kA²s	770 kA²s	200 kA	135 W	✓	3	0.87 kg
PC33UD69V10CD1A	Z300264	690 V	700 V	1000 A	170 kA²s	990 kA²s	200 kA	155 W	✓	3	0.87 kg
PC33UD69V11CD1A	A300265	690 V	700 V	1100 A	240 kA²s	1390 kA²s	200 kA	160 W	✓	3	0.87 kg
Reinforced Terminal											
PC33UD69V12CD1A	B300266	690 V	700 V	1250 A	355 kA²s	2053 kA²s	200 kA	180 W	✓	3	0.87 kg
PC33UD69V14CD1A	C300267	690 V	700 V	1400 A	465 kA²s	2700 kA²s	200 kA	200 W	✓	3	0.87 kg
PC33UD60V15CD1A	H301974	600 V	650 V	1500 A	470 kA²s	2500 kA²s	200 kA	210 W	✓	3	0.87 kg
PC33UD60V16CD1A	Z301437	600 V	650 V	1600 A	500 kA²s	2900 kA²s	200 kA	240 W	✓	3	0.87 kg
PC33UD55V20CD1A	S1015765	550 V	600 V	2000 A	950 kA²s	4500 kA²s	200 kA	290 W	✓	3	0.87 kg

© 2024 Mersen products have been designed by Mersen for a range of specific applications to be operated depending on particular specification and conditions. Mersen makes no representation or/and warranty, and waives any liability, either express or implied for products' reliability and life time or technical performance in case Mersen has not been provided with customer's specifications or if the products are not purchased directly from Mersen or its distributors and/or agents.

PRODUCT RANGE



A070UD33KI1100

Size 33 type KI short slotted blades

Catalog number	Item number	Rated voltage AC (IEC)	Rated voltage AC (UL)	Rated current I_n	Pre-arcing I^2t	Clearing I^2t at Rated Voltage	Rated breaking capacity AC	Power dissipation at I_n	UL certified	Package	Weight
Standard Terminal											
A070UD33KI500	W300238	690 V	700 V	500 A	19 kA²s	110 kA²s	200 kA	105 W	✓	3	0.85 kg
A070UD33KI550	X300239	690 V	700 V	550 A	27 kA²s	155 kA²s	200 kA	110 W	✓	3	0.85 kg
A070UD33KI630	Y300240	690 V	700 V	630 A	40 kA²s	230 kA²s	200 kA	120 W	✓	3	0.85 kg
A070UD33KI700	Z300241	690 V	700 V	700 A	57 kA²s	330 kA²s	200 kA	125 W	✓	3	0.85 kg
A070UD33KI800	A300242	690 V	700 V	800 A	93 kA²s	540 kA²s	200 kA	130 W	✓	3	0.85 kg
A070UD33KI900	B300243	690 V	700 V	900 A	130 kA²s	770 kA²s	200 kA	135 W	✓	3	0.85 kg
A070UD33KI1000	C300244	690 V	700 V	1000 A	170 kA²s	990 kA²s	200 kA	155 W	✓	3	0.85 kg
A070UD33KI1100	D300245	690 V	700 V	1100 A	240 kA²s	1390 kA²s	200 kA	160 W	✓	3	0.85 kg
Reinforced Terminal											
A070UD33KI1250	E300246	690 V	700 V	1250 A	355 kA²s	2053 kA²s	200 kA	180 W	✓	3	0.85 kg
A070UD33KI1400	F300247	690 V	700 V	1400 A	465 kA²s	2700 kA²s	200 kA	200 W	✓	3	0.85 kg
A065UD33KI1600	E302063	600 V	650 V	1600 A	555 kA²s	2900 kA²s	200 kA	240 W	✓	3	0.85 kg



A070UD33LI1100

Size 33 type LI long slotted blades

Catalog number	Item number	Rated voltage AC (IEC)	Rated voltage AC (UL)	Rated current I_n	Pre-arcing I^2t	Clearing I^2t at Rated Voltage	Rated breaking capacity AC	Power dissipation at I_n	UL certified	Package	Weight
Standard Terminal											
A070UD33LI450	Y302172	690 V	700 V	450 A	13.45 kA²s	87 kA²s	200 kA	88 W	✓	3	0.88 kg
A070UD33LI500	K300228	690 V	700 V	500 A	19 kA²s	110 kA²s	200 kA	105 W	✓	3	0.88 kg
A070UD33LI550	L300229	690 V	700 V	550 A	27 kA²s	155 kA²s	200 kA	110 W	✓	3	0.88 kg
A070UD33LI630	M300230	690 V	700 V	630 A	40 kA²s	230 kA²s	200 kA	120 W	✓	3	0.88 kg
A070UD33LI700	N300231	690 V	700 V	700 A	57 kA²s	330 kA²s	200 kA	125 W	✓	3	0.88 kg
A070UD33LI800	P300232	690 V	700 V	800 A	93 kA²s	540 kA²s	200 kA	130 W	✓	3	0.88 kg
A070UD33LI900	Q300233	690 V	700 V	900 A	130 kA²s	770 kA²s	200 kA	135 W	✓	3	0.88 kg
A070UD33LI1000	R300234	690 V	700 V	1000 A	170 kA²s	990 kA²s	200 kA	155 W	✓	3	0.88 kg
Reinforced Terminal											
A070UD33LI1100	S300235	690 V	700 V	1100 A	240 kA²s	1390 kA²s	200 kA	160 W	✓	3	0.88 kg
A070UD33LI1250	T300236	690 V	700 V	1250 A	355 kA²s	2053 kA²s	200 kA	180 W	✓	3	0.88 kg
A070UD33LI1400	V300237	690 V	700 V	1400 A	465 kA²s	2700 kA²s	200 kA	200 W	✓	3	0.88 kg
A060UD33LI1500	P300531	600 V	650 V	1500 A	470 kA²s	2500 kA²s	200 kA	210 W	✓	3	0.88 kg
A060UD33LI2000	J301078	550 V	600 V	2000 A	950 kA²s	4500 kA²s	200 kA	290 W	✓	3	0.88 kg
A065UD33LI1600	G301076	600 V	650 V	1600 A	555 kA²s	2900 kA²s	200 kA	240 W	✓	3	0.88 kg
A065UD33LI1800	H301077	600 V	650 V	1800 A	720 kA²s	3870 kA²s	200 kA	260 W	✓	3	0.88 kg

© 2024 Mersen products have been designed by Mersen for a range of specific applications to be operated depending on particular specification and conditions. Mersen makes no representation or/and warranty, and waives any liability, either express or implied for products' reliability and life time or technical performance in case Mersen has not been provided with customer's specifications or if the products are not purchased directly from Mersen or its distributors and/or agents.

PRODUCT RANGE



PC33UD69V1400EF

Size 33 type EF style notched blade connections

Catalog number	Item number	Rated voltage AC (IEC)	Rated voltage AC (UL)	Rated current I_n	Pre-arcing I^2t	Clearing I^2t at Rated Voltage	Rated breaking capacity AC	Power dissipation at I_n	UL certified	Package	Weight
Standard Terminal											
PC33UD69V500EF	Z300218	690 V	700 V	500 A	19 kA²s	110 kA²s	200 kA	105 W	✓	3	0.85 kg
PC33UD69V550EF	A300219	690 V	700 V	550 A	27 kA²s	155 kA²s	200 kA	110 W	✓	3	0.85 kg
PC33UD69V630EF	B300220	690 V	700 V	630 A	40 kA²s	230 kA²s	200 kA	120 W	✓	3	0.85 kg
PC33UD69V700EF	C300221	690 V	700 V	700 A	57 kA²s	330 kA²s	200 kA	125 W	✓	3	0.85 kg
PC33UD69V800EF	D300222	690 V	700 V	800 A	93 kA²s	540 kA²s	200 kA	130 W	✓	3	0.85 kg
PC33UD69V900EF	E300223	690 V	700 V	900 A	130 kA²s	770 kA²s	200 kA	135 W	✓	3	0.85 kg
PC33UD69V1000EF	F300224	690 V	700 V	1000 A	170 kA²s	990 kA²s	200 kA	155 W	✓	3	0.85 kg
PC33UD69V1100EF	G300225	690 V	700 V	1100 A	240 kA²s	1390 kA²s	200 kA	160 W	✓	3	0.85 kg
Reinforced Terminal											
PC33UD69V1250EF	H300226	690 V	700 V	1250 A	355 kA²s	2053 kA²s	200 kA	180 W	✓	3	0.85 kg
PC33UD69V1400EF	J300227	690 V	700 V	1400 A	465 kA²s	2700 kA²s	200 kA	200 W	✓	3	0.85 kg

Size 33 type PA plain blades

Catalog number	Item number	Rated voltage AC (IEC)	Rated voltage AC (UL)	Rated current I_n	Pre-arcing I^2t	Clearing I^2t at Rated Voltage	Rated breaking capacity AC	Power dissipation at I_n	UL certified	Package	Weight
PC33UD60V1600PA	W302722	600 V	650 V	1600 A	555 kA²s	2900 kA²s	200 kA	240 W	✓	3	1.17 kg
PC33UD69V1250PA	V302721	690 V	700 V	1250 A	355 kA²s	2053 kA²s	200 kA	180 W	✓	3	1.17 kg
PC33UD69V1400PA	P1028044	690 V	700 V	1400 A	465 kA²s	2700 kA²s	200 kA	200 W	✓	3	1.17 kg

© 2024 Mersen products have been designed by Mersen for a range of specific applications to be operated depending on particular specification and conditions. Mersen makes no representation or/and warranty, and waives any liability, either express or implied for products' reliability and life time or technical performance in case Mersen has not been provided with customer's specifications or if the products are not purchased directly from Mersen or its distributors and/or agents.

TIME CURRENT CHARACTERISTIC CURVES

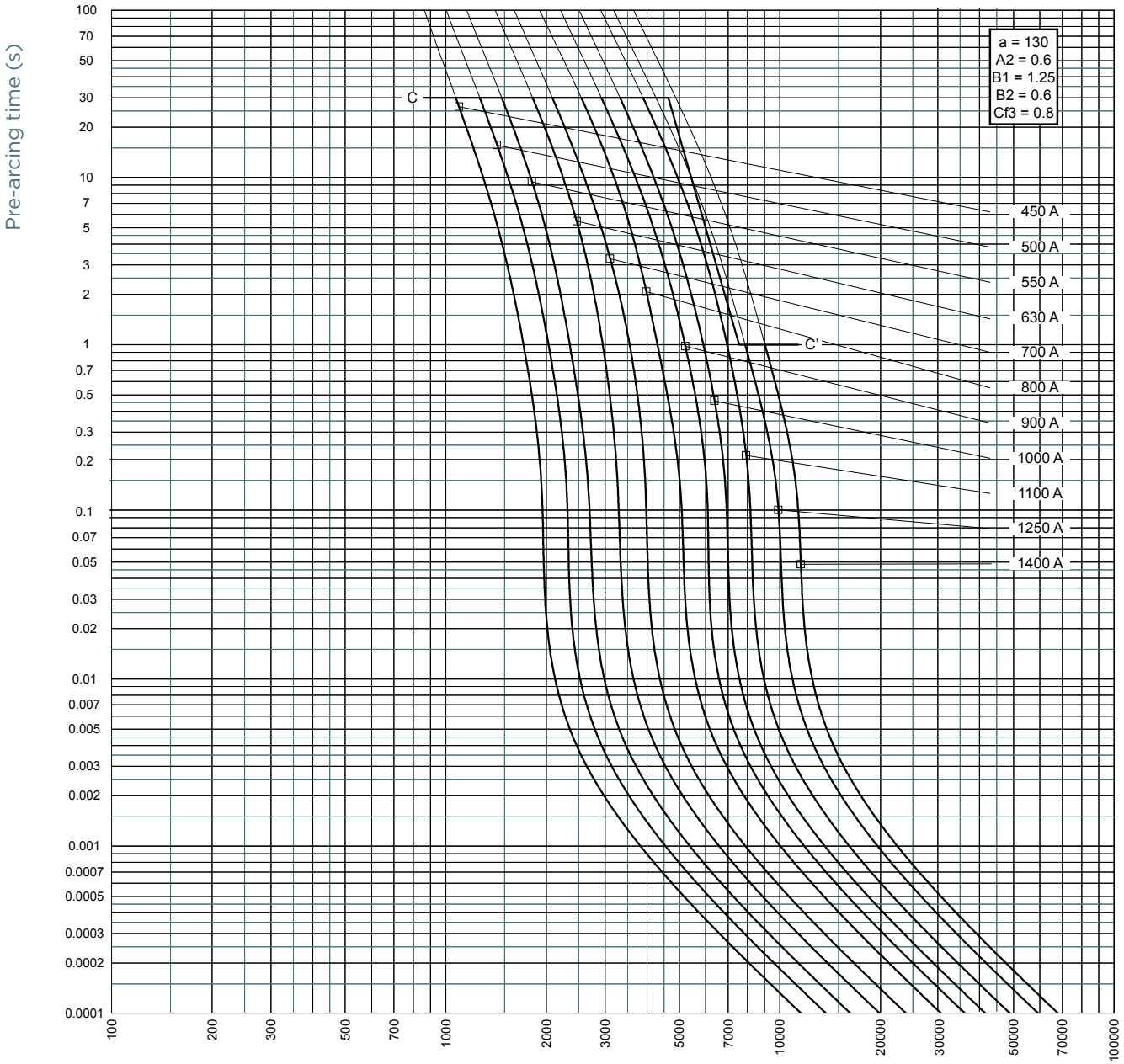

© 2024 Mersen products have been designed by Mersen for a range of specific applications to be operated depending on particular specification and conditions. Mersen makes no representation or/and warranty, and waives any liability, either express or implied for products' reliability and life time or technical performance in case Mersen has not been provided with customer's specifications or if the products are not purchased directly from Mersen or its distributors and/or agents.

TIME CURRENT CHARACTERISTIC CURVES

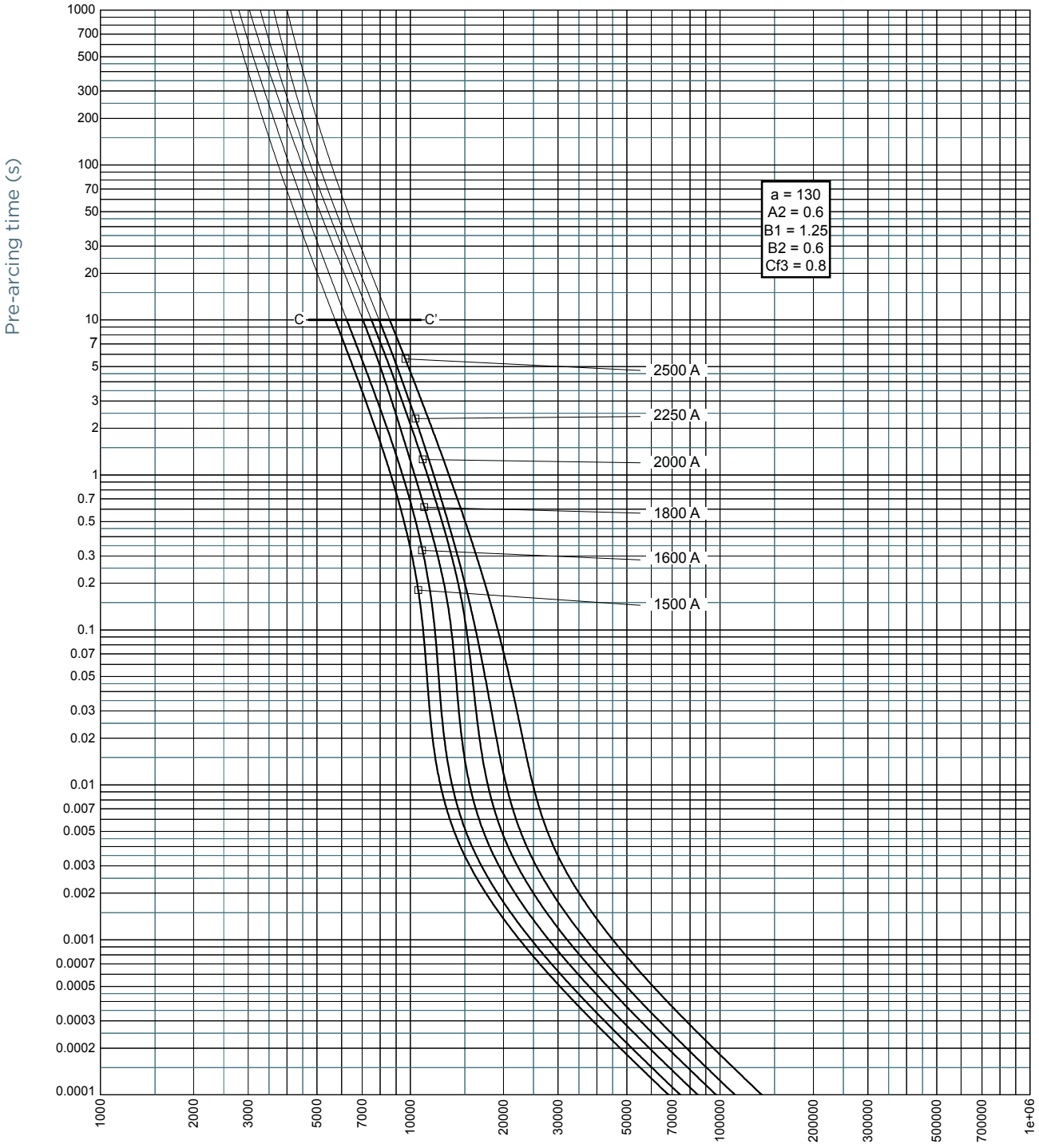

© 2024 Mersen products have been designed by Mersen for a range of specific applications to be operated depending on particular specification and conditions. Mersen makes no representation or/and warranty, and waives any liability, either express or implied for products' reliability and life time or technical performance in case Mersen has not been provided with customer's specifications or if the products are not purchased directly from Mersen or its distributors and/or agents.

CUT-OFF CURRENT CHARACTERISTIC

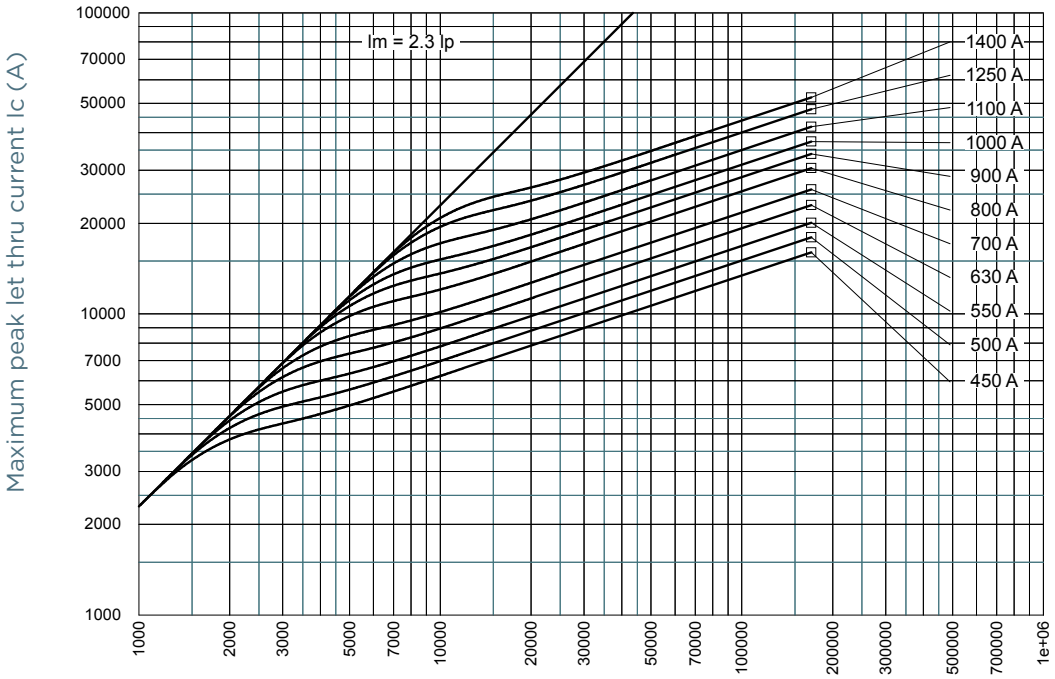

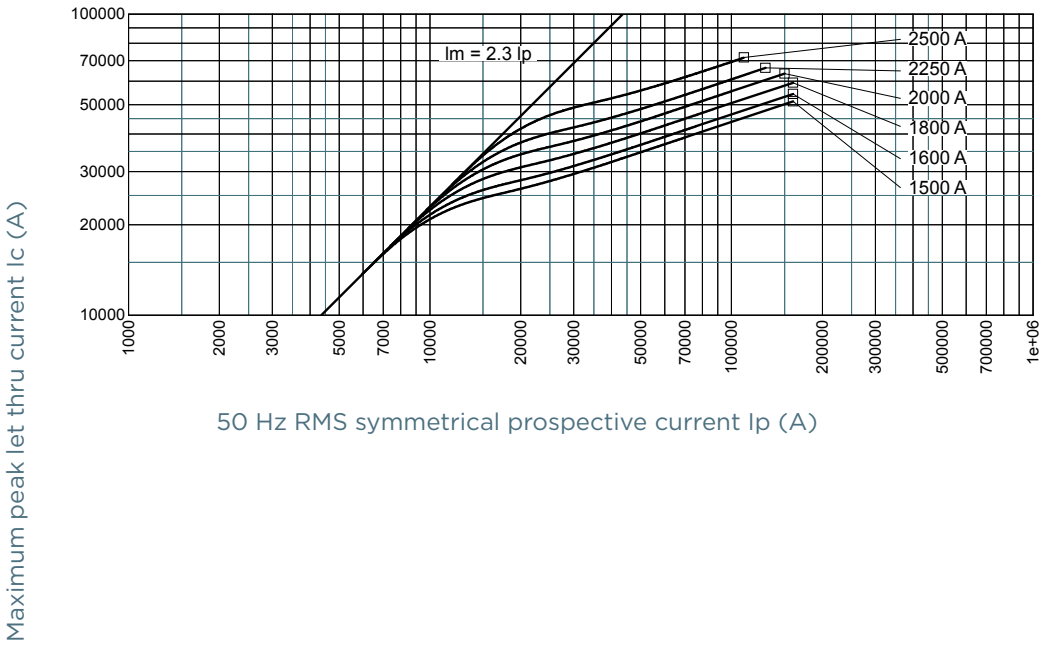

© 2024 Mersen products have been designed by Mersen for a range of specific applications to be operated depending on particular specification and conditions. Mersen makes no representation or/and warranty, and waives any liability, either express or implied for products' reliability and life time or technical performance in case Mersen has not been provided with customer's specifications or if the products are not purchased directly from Mersen or its distributors and/or agents.

I²T MULTIPLIER COEFFICIENT

Size 33 690V

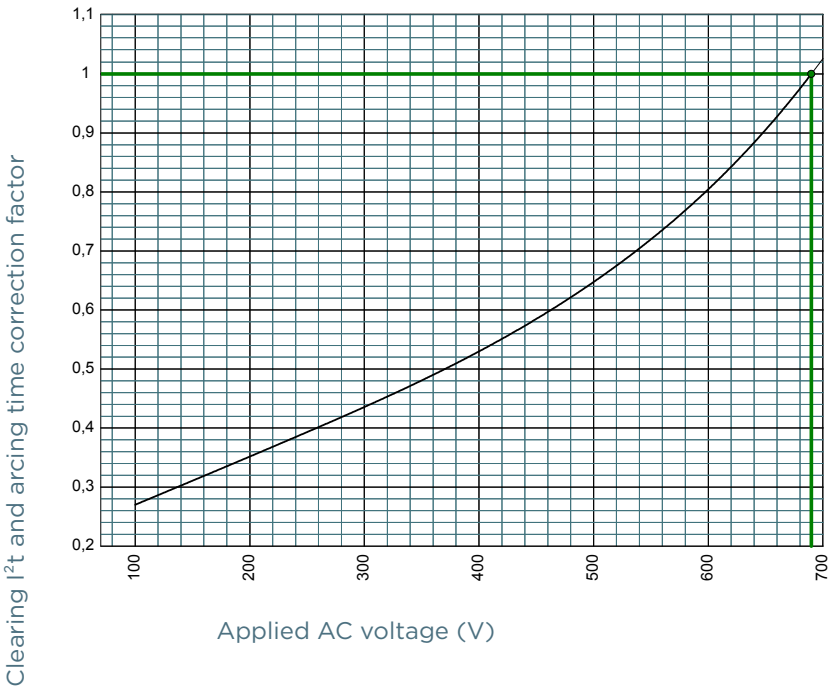

Size 33 600V

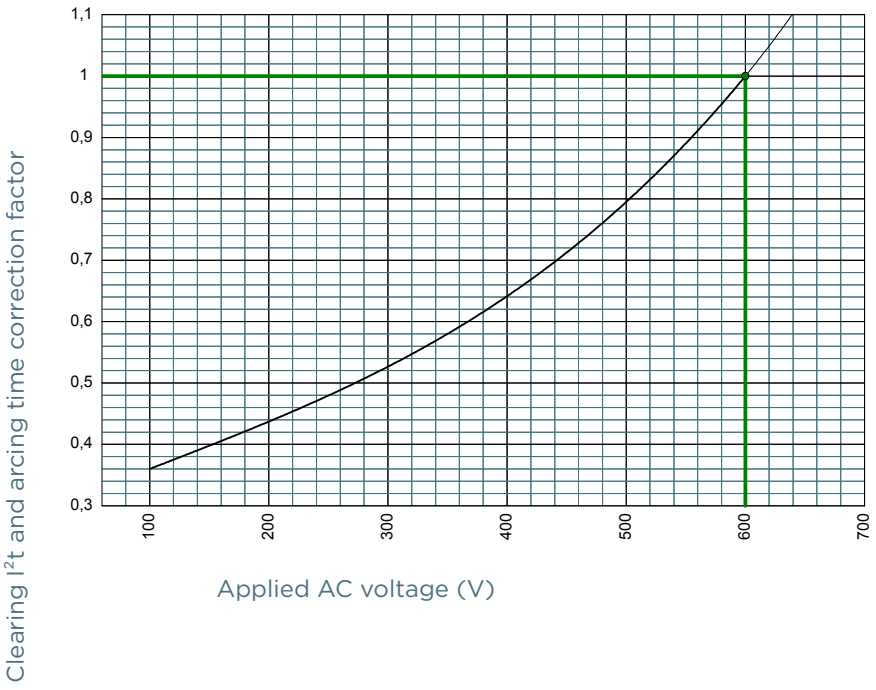

© 2024 Mersen products have been designed by Mersen for a range of specific applications to be operated depending on particular specification and conditions. Mersen makes no representation or/and warranty, and waives any liability, either express or implied for products' reliability and life time or technical performance in case Mersen has not been provided with customer's specifications or if the products are not purchased directly from Mersen or its distributors and/or agents.

I^2T MULTIPLIER COEFFICIENT

Size 33 550V

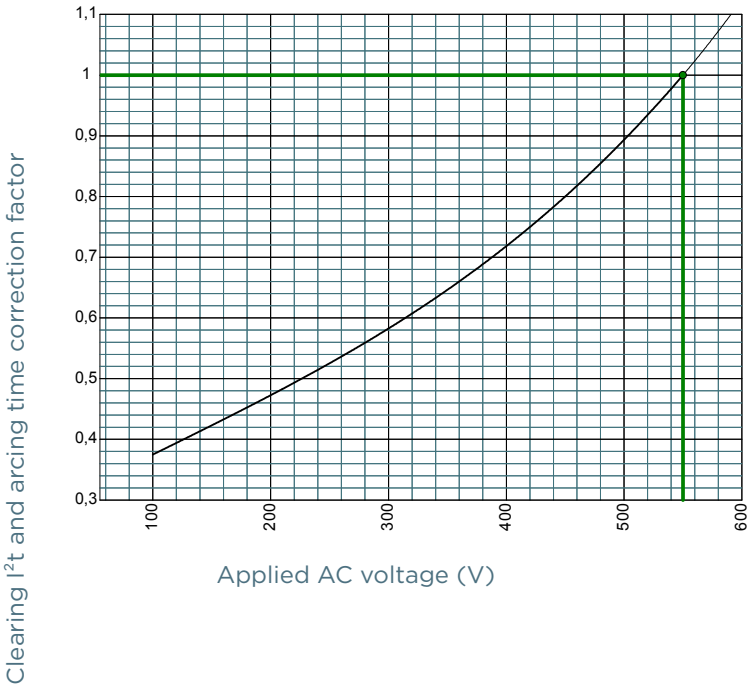

Size 33 500V

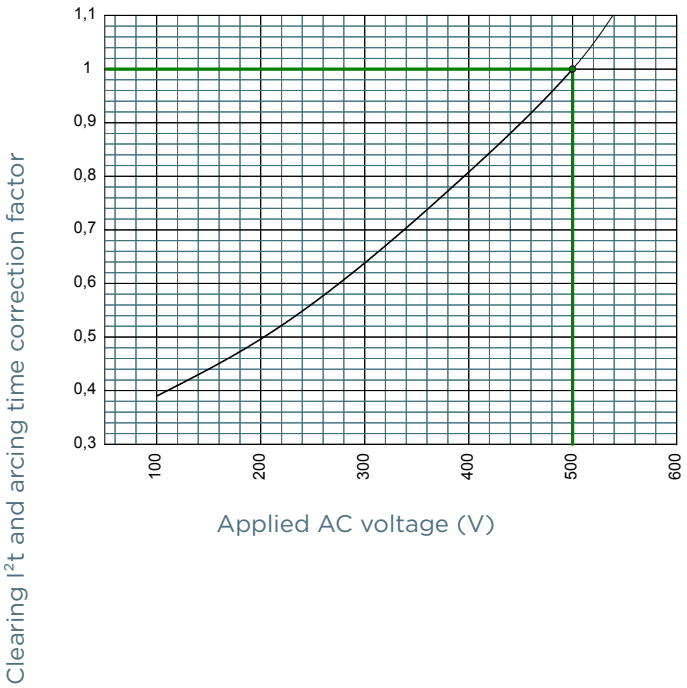

© 2024 Mersen products have been designed by Mersen for a range of specific applications to be operated depending on particular specification and conditions. Mersen makes no representation or/and warranty, and waives any liability, either express or implied for products' reliability and life time or technical performance in case Mersen has not been provided with customer's specifications or if the products are not purchased directly from Mersen or its distributors and/or agents.

I^2T MULTIPLIER COEFFICIENT

Size 33 450V

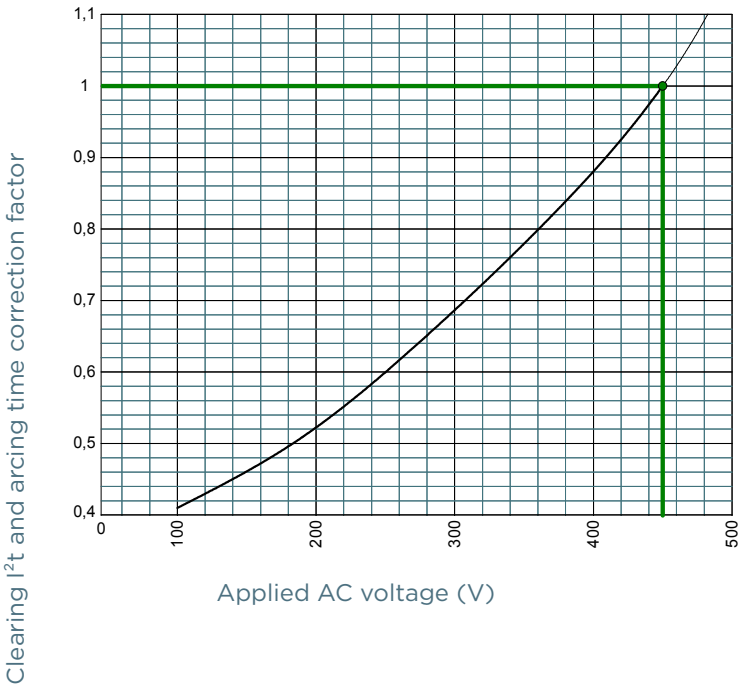

© 2024 Mersen products have been designed by Mersen for a range of specific applications to be operated depending on particular specification and conditions. Mersen makes no representation or/and warranty, and waives any liability, either express or implied for products' reliability and life time or technical performance in case Mersen has not been provided with customer's specifications or if the products are not purchased directly from Mersen or its distributors and/or agents.

CHARACTERISTICS TOTAL I^2T CURVE

Size 33 690V

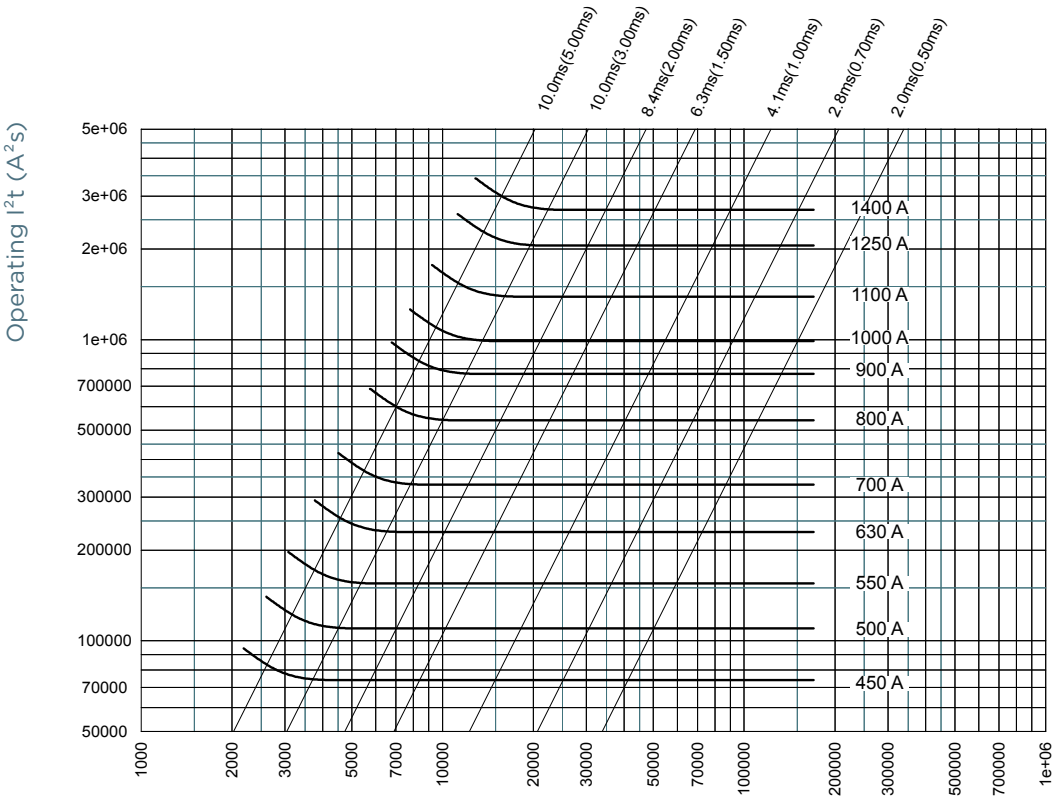

Size 33 600V

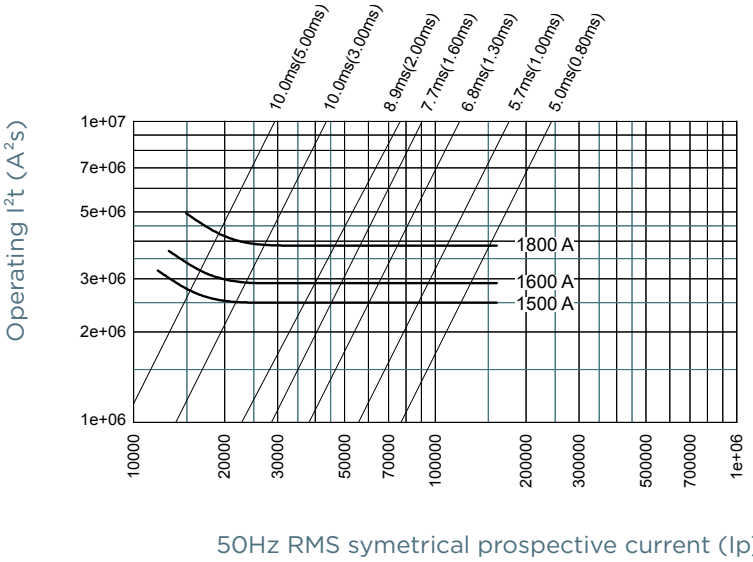

© 2024 Mersen products have been designed by Mersen for a range of specific applications to be operated depending on particular specification and conditions. Mersen makes no representation or/and warranty, and waives any liability, either express or implied for products' reliability and life time or technical performance in case Mersen has not been provided with customer's specifications or if the products are not purchased directly from Mersen or its distributors and/or agents.

CHARACTERISTICS TOTAL I^2T CURVE

Size 33 550V

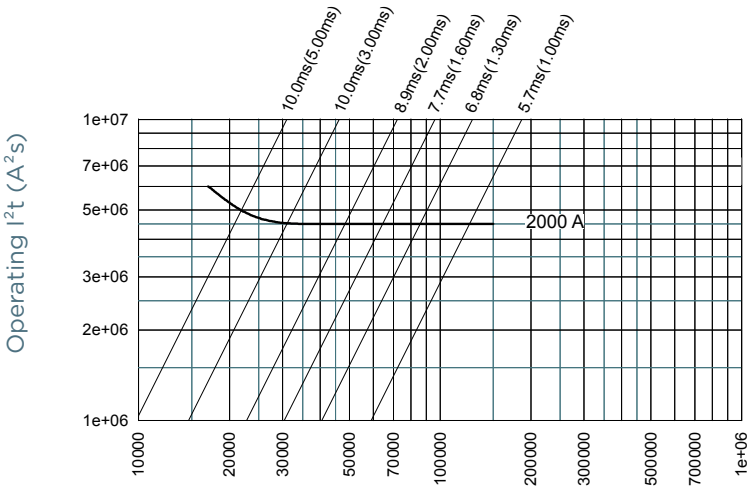

50Hz RMS symetrical prospective current (Ip)(A)

Size 33 500V

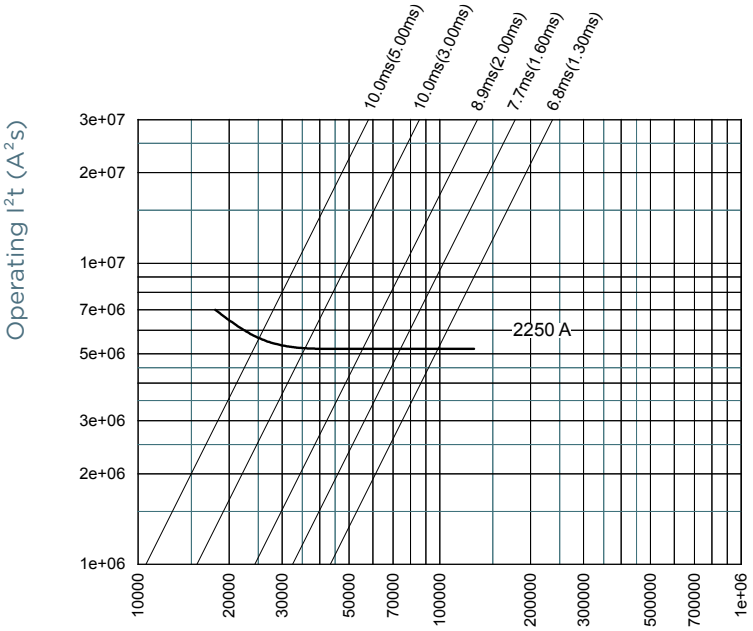

50Hz RMS symetrical prospective current (Ip)(A)

© 2024 Mersen products have been designed by Mersen for a range of specific applications to be operated depending on particular specification and conditions. Mersen makes no representation or/and warranty, and waives any liability, either express or implied for products' reliability and life time or technical performance in case Mersen has not been provided with customer's specifications or if the products are not purchased directly from Mersen or its distributors and/or agents.

CHARACTERISTICS TOTAL I^2T CURVE

Size 33 450V

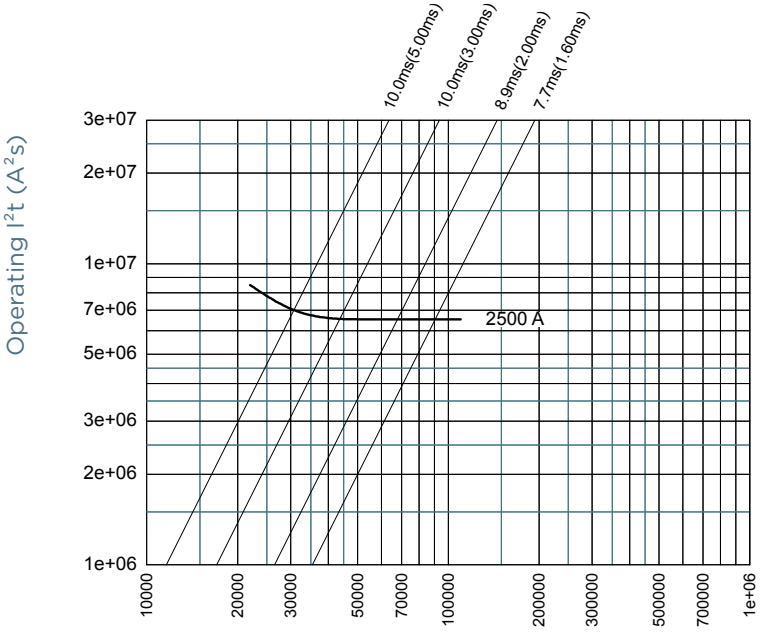

POWER DISSIPATION

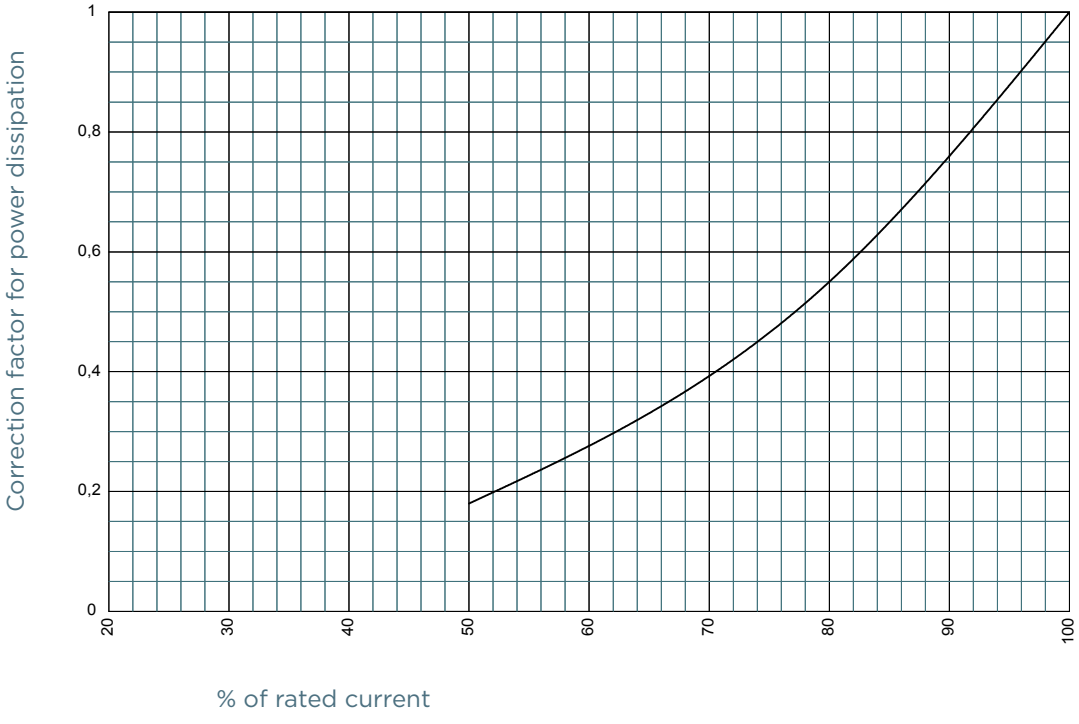

EP.MERSEN.COM

© 2024 Mersen products have been designed by Mersen for a range of specific applications to be operated depending on particular specification and conditions. Mersen makes no representation or/and warranty, and waives any liability, either express or implied for products' reliability and life time or technical performance in case Mersen has not been provided with customer's specifications or if the products are not purchased directly from Mersen or its distributors and/or agents.

MERSEN Expertise, our source of energy

PEAK ARC VOLTAGE

Size 33 690V

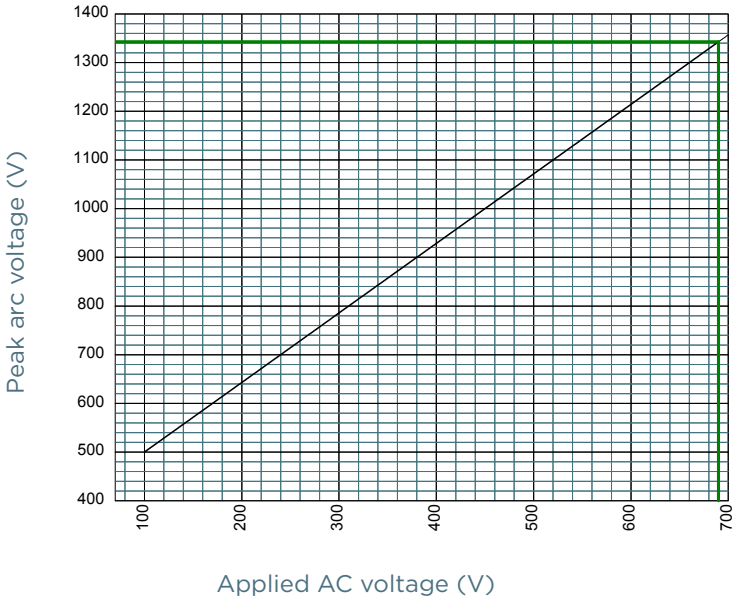

Size 33 600V

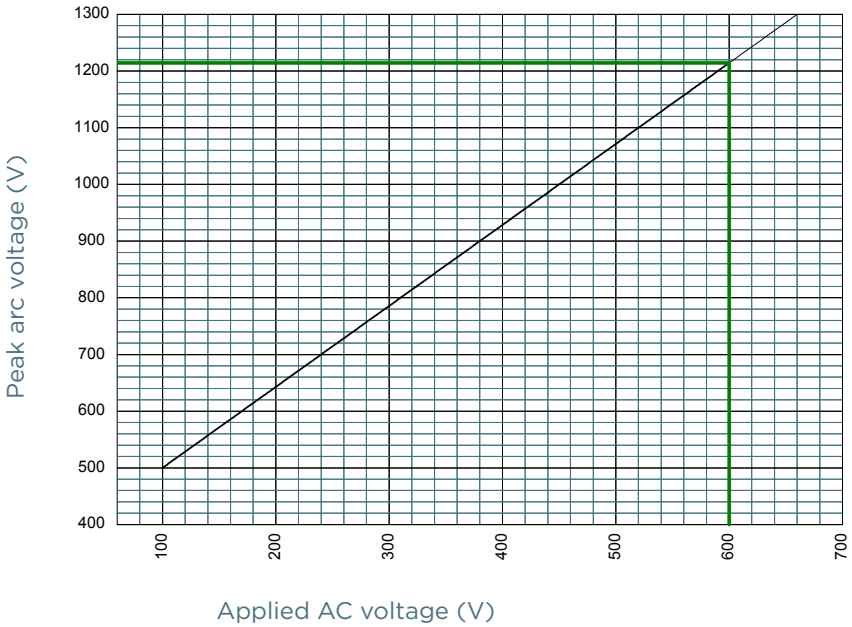

© 2024 Mersen products have been designed by Mersen for a range of specific applications to be operated depending on particular specification and conditions. Mersen makes no representation or/and warranty, and waives any liability, either express or implied for products' reliability and life time or technical performance in case Mersen has not been provided with customer's specifications or if the products are not purchased directly from Mersen or its distributors and/or agents.

PEAK ARC VOLTAGE

Size 33 550V

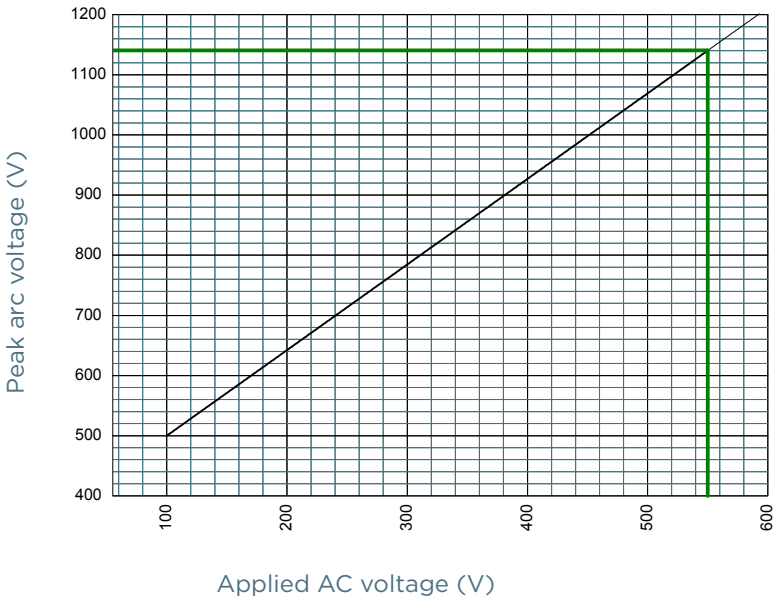

Size 33 500V

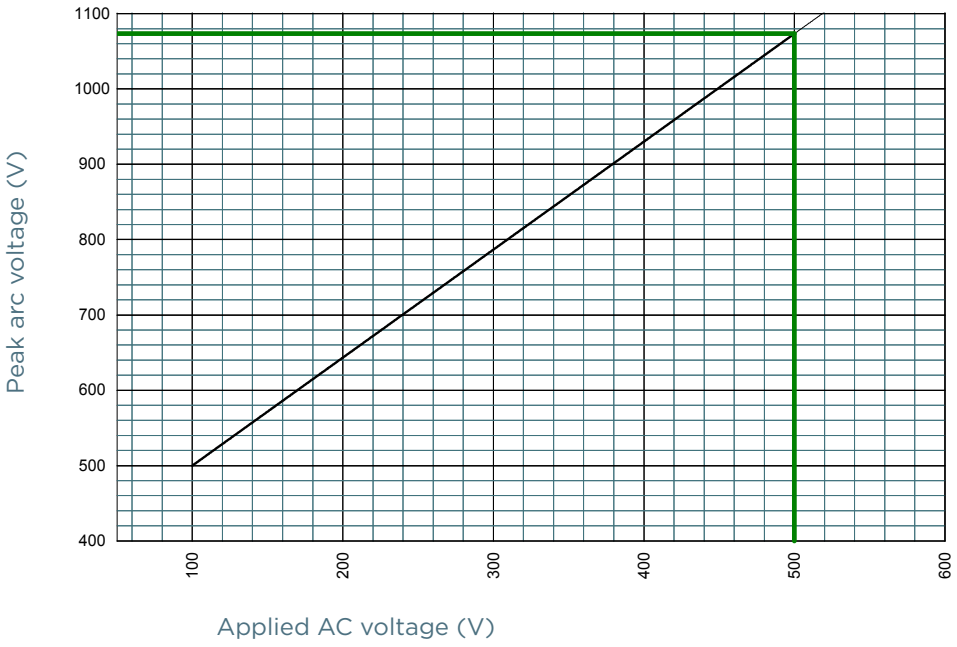

© 2024 Mersen products have been designed by Mersen for a range of specific applications to be operated depending on particular specification and conditions. Mersen makes no representation or/and warranty, and waives any liability, either express or implied for products' reliability and life time or technical performance in case Mersen has not been provided with customer's specifications or if the products are not purchased directly from Mersen or its distributors and/or agents.

PEAK ARC VOLTAGE

Size 33 450V

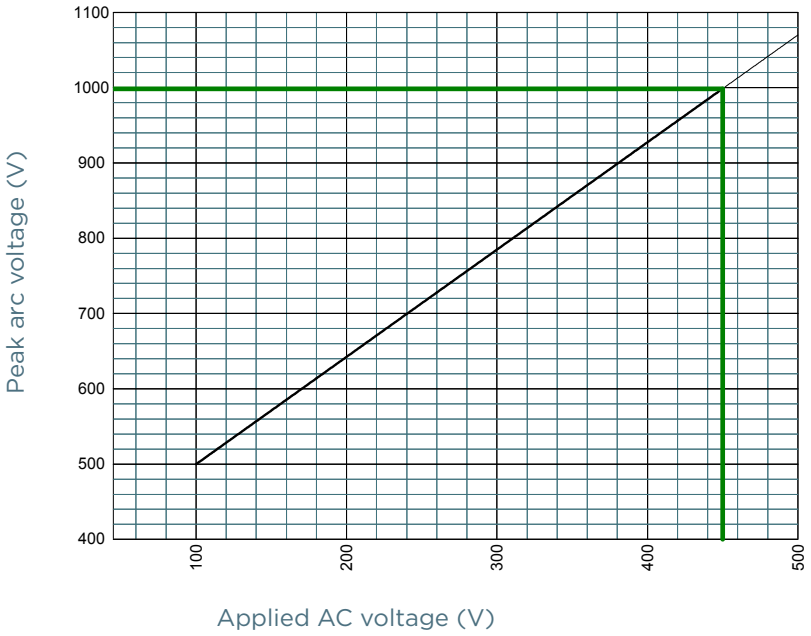

© 2024 Mersen products have been designed by Mersen for a range of specific applications to be operated depending on particular specification and conditions. Mersen makes no representation or/and warranty, and waives any liability, either express or implied for products' reliability and life time or technical performance in case Mersen has not been provided with customer's specifications or if the products are not purchased directly from Mersen or its distributors and/or agents.

DIMENSIONS

size 33 type DIN 80 (102931)

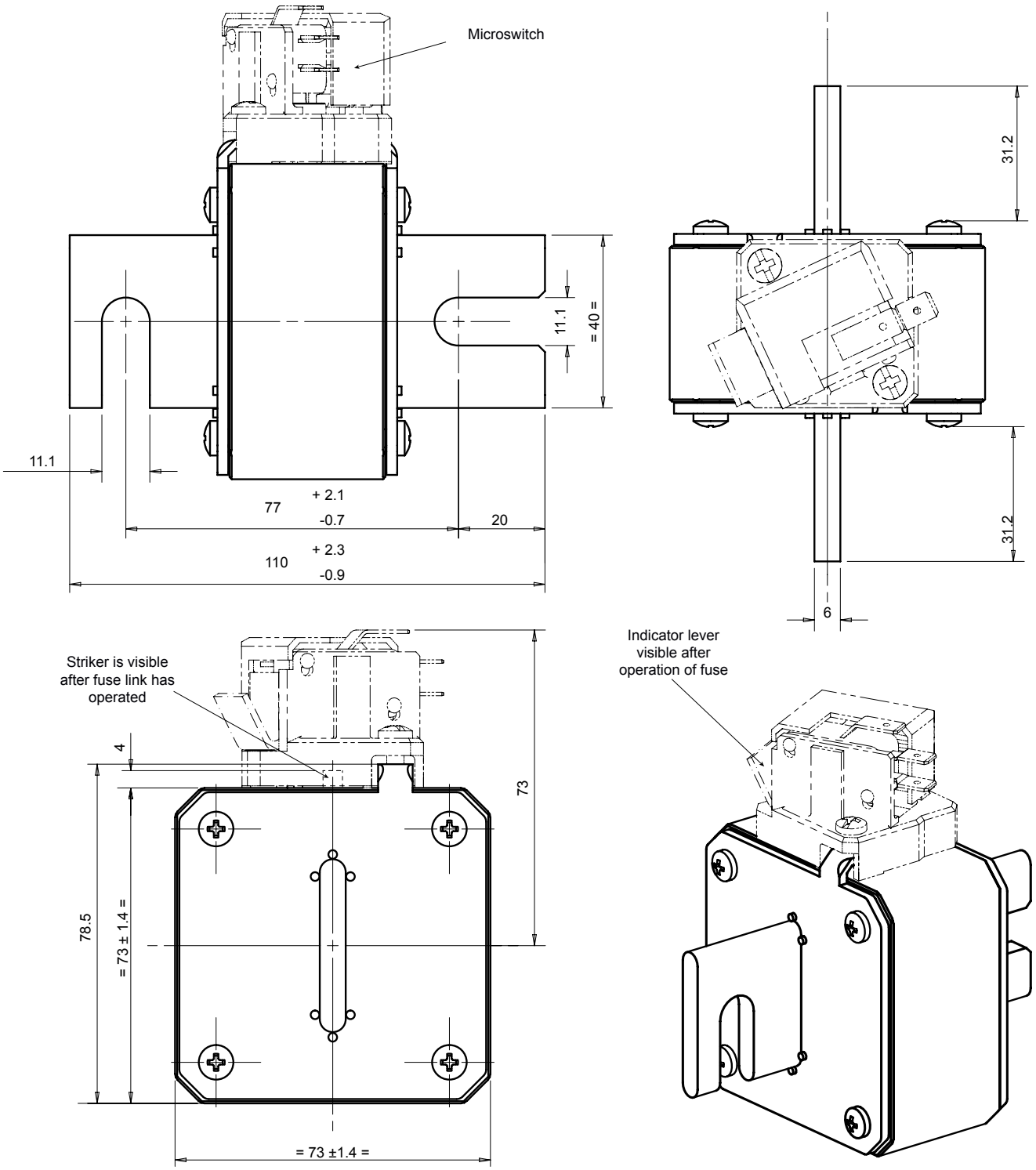

Dimensions in mm

EP.MERSEN.COM

© 2024 Mersen products have been designed by Mersen for a range of specific applications to be operated depending on particular specification and conditions. Mersen makes no representation or/and warranty, and waives any liability, either express or implied for products' reliability and life time or technical performance in case Mersen has not been provided with customer's specifications or if the products are not purchased directly from Mersen or its distributors and/or agents.

MERSEN Expertise, our source of energy

DIMENSIONS

size 33 type DIN 110 (102932)

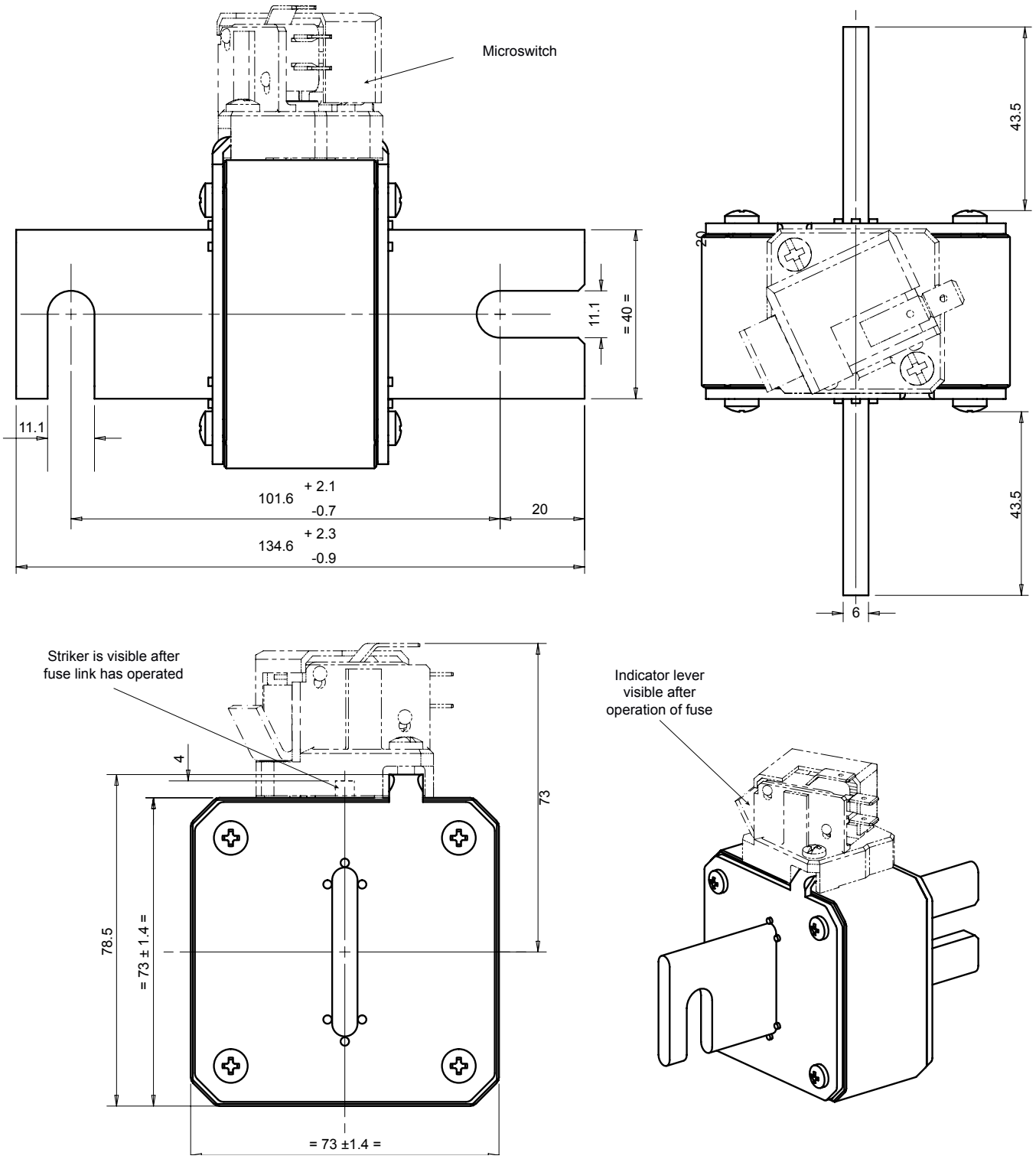

Dimensions in mm

EP.MERSEN.COM

© 2024 Mersen products have been designed by Mersen for a range of specific applications to be operated depending on particular specification and conditions. Mersen makes no representation or/and warranty, and waives any liability, either express or implied for products' reliability and life time or technical performance in case Mersen has not been provided with customer's specifications or if the products are not purchased directly from Mersen or its distributors and/or agents.

MERSEN Expertise, our source of energy

DIMENSIONS

size 33 type EF (102930)

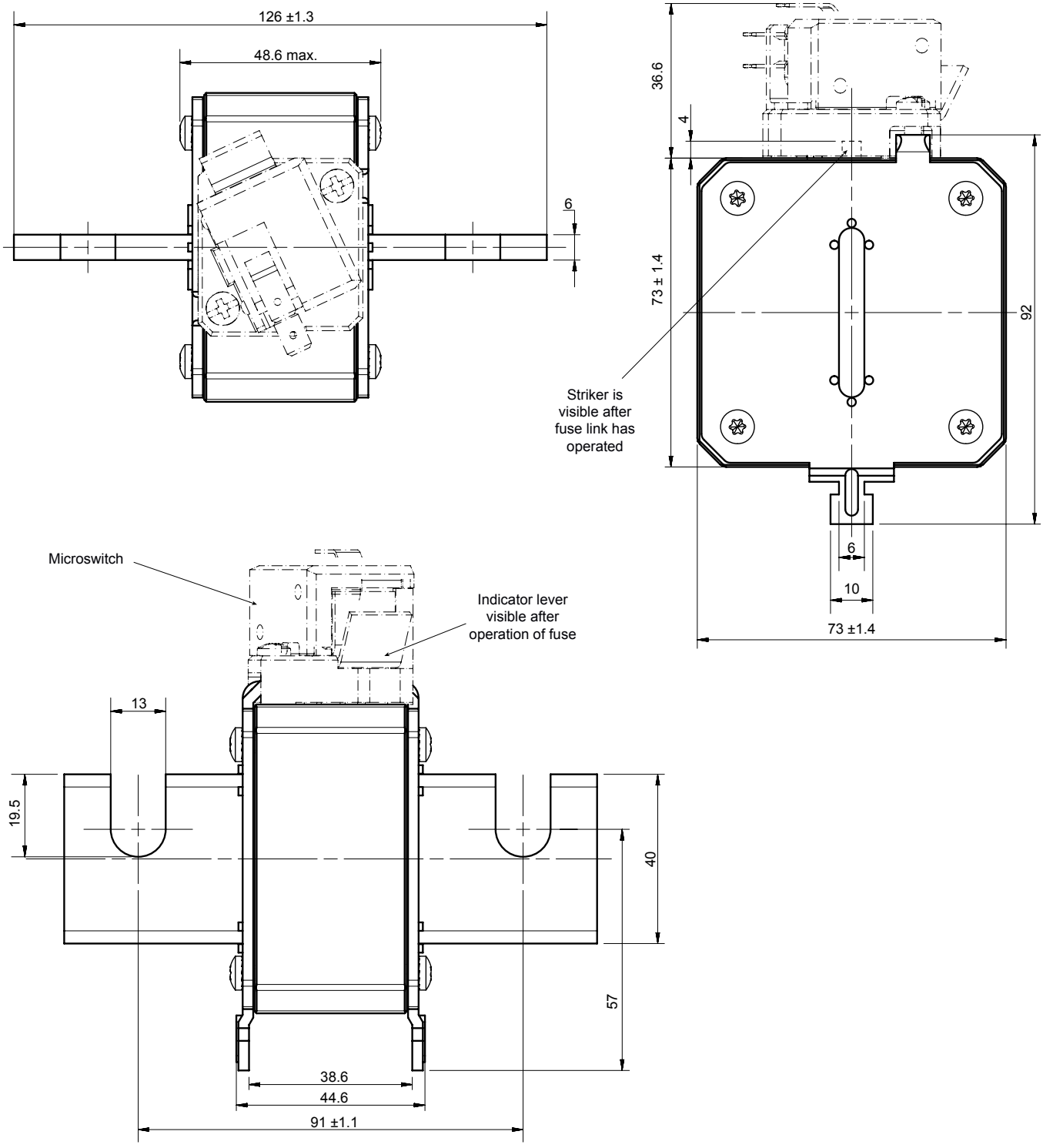

Dimensions in mm

© 2024 Mersen products have been designed by Mersen for a range of specific applications to be operated depending on particular specification and conditions. Mersen makes no representation or/and warranty, and waives any liability, either express or implied for products' reliability and life time or technical performance in case Mersen has not been provided with customer's specifications or if the products are not purchased directly from Mersen or its distributors and/or agents.

DIMENSIONS

size 33 type KI (102929)

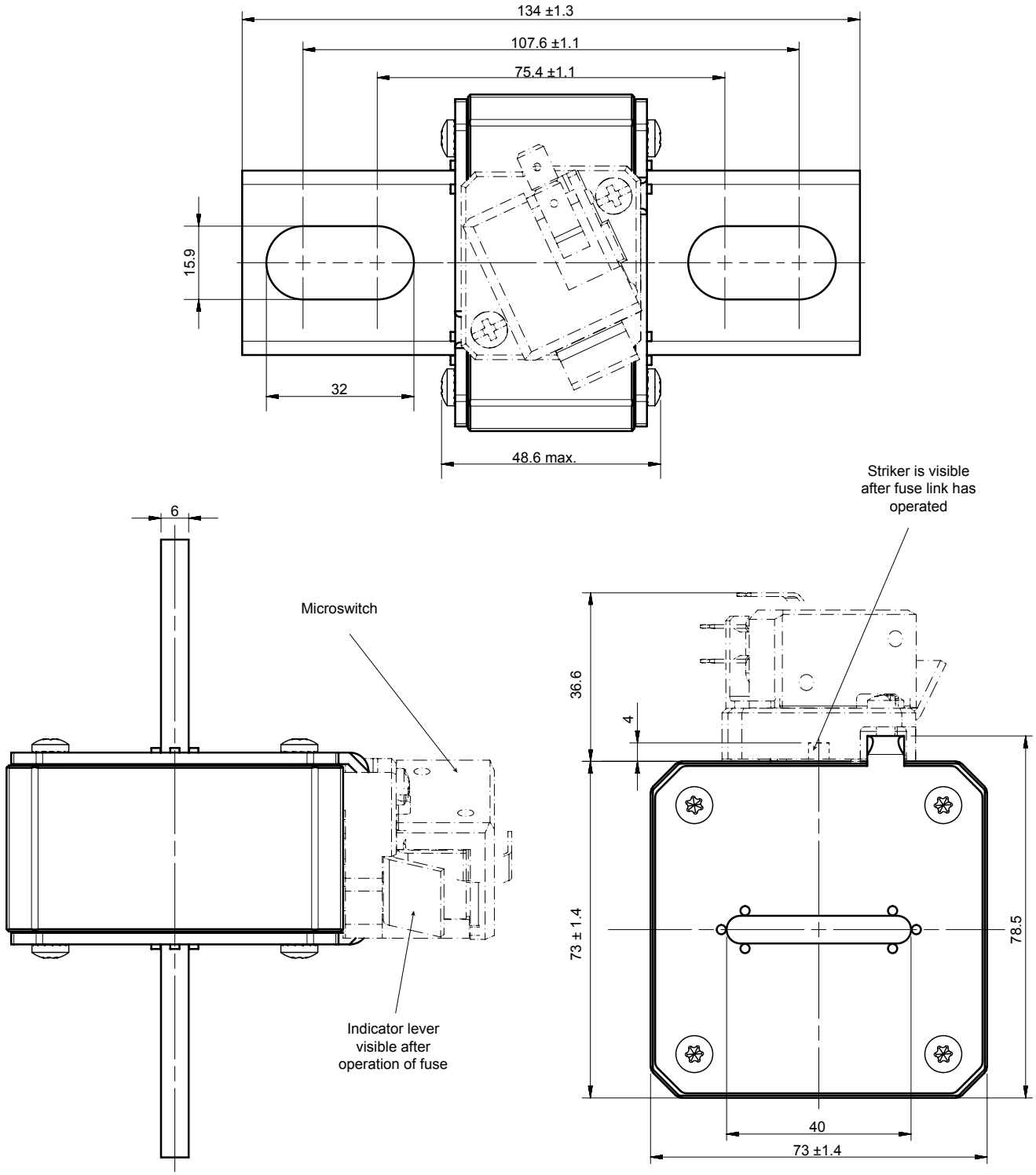

Dimensions in mm

©2024 Mersen products have been designed by Mersen for a range of specific applications to be operated depending on particular specification and conditions. Mersen makes no representation or/and warranty, and waives any liability, either express or implied for products' reliability and life time or technical performance in case Mersen has not been provided with customer's specifications or if the products are not purchased directly from Mersen or its distributors and/or agents.

DIMENSIONS

size 33 type LI reinforced (109524)

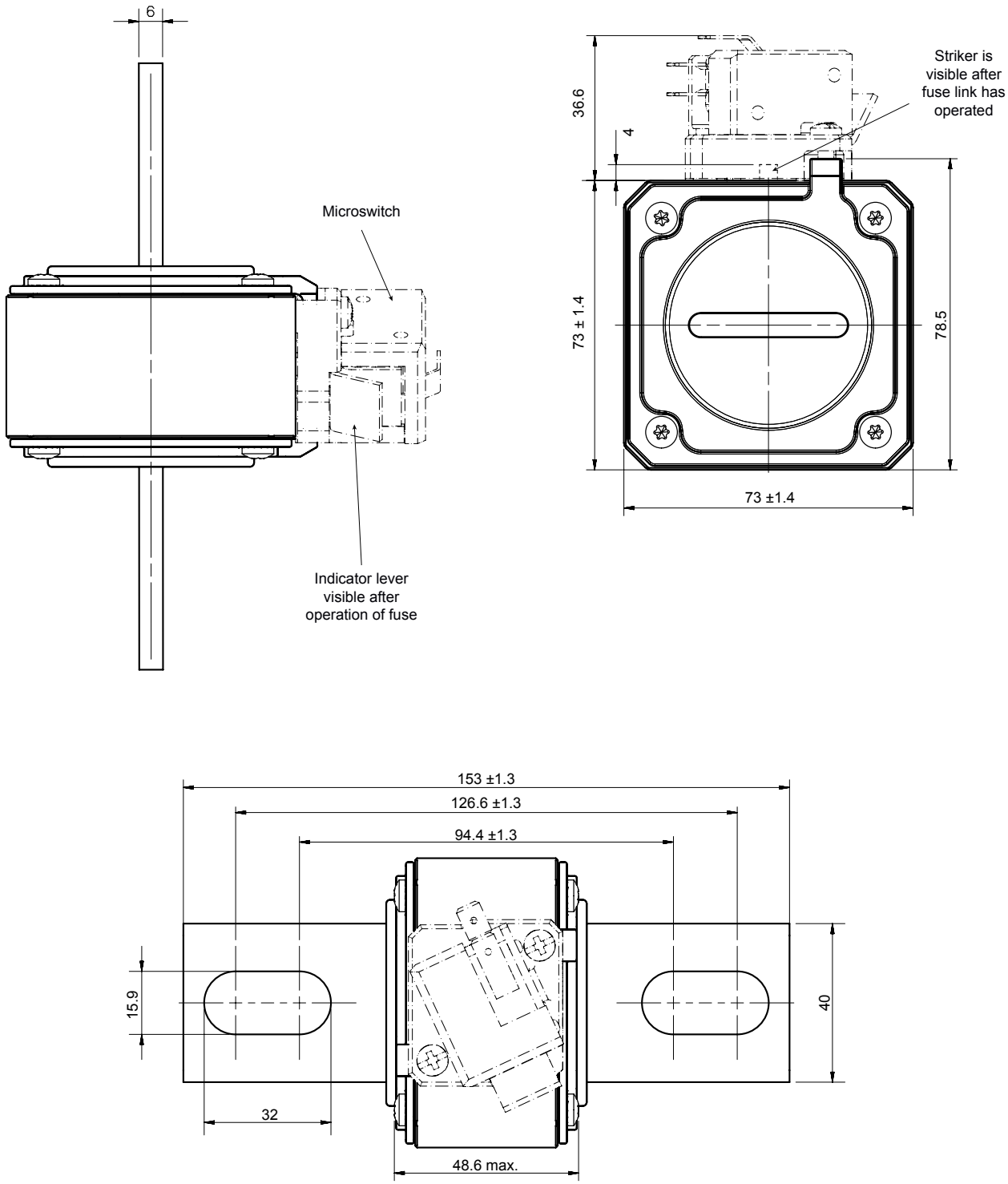

Dimensions in mm

© 2024 Mersen products have been designed by Mersen for a range of specific applications to be operated depending on particular specification and conditions. Mersen makes no representation or/and warranty, and waives any liability, either express or implied for products' reliability and life time or technical performance in case Mersen has not been provided with customer's specifications or if the products are not purchased directly from Mersen or its distributors and/or agents.

DIMENSIONS

size 33 type PA plain blades (107900)

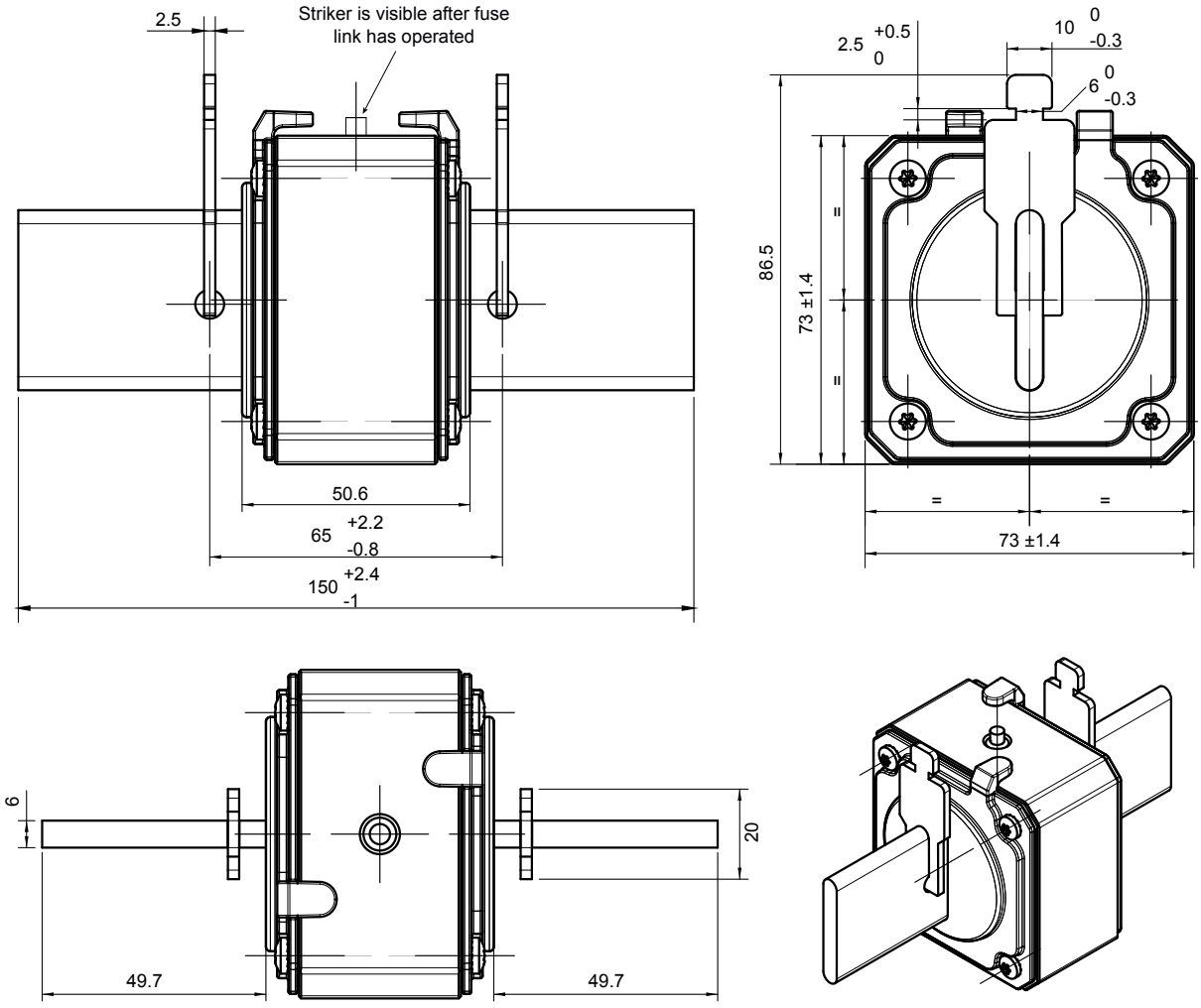

Dimensions in mm

© 2024 Mersen products have been designed by Mersen for a range of specific applications to be operated depending on particular specification and conditions. Mersen makes no representation or/and warranty, and waives any liability, either express or implied for products' reliability and life time or technical performance in case Mersen has not been provided with customer's specifications or if the products are not purchased directly from Mersen or its distributors and/or agents.

DIMENSIONS

size 33 TTF Standard Terminal (102757)

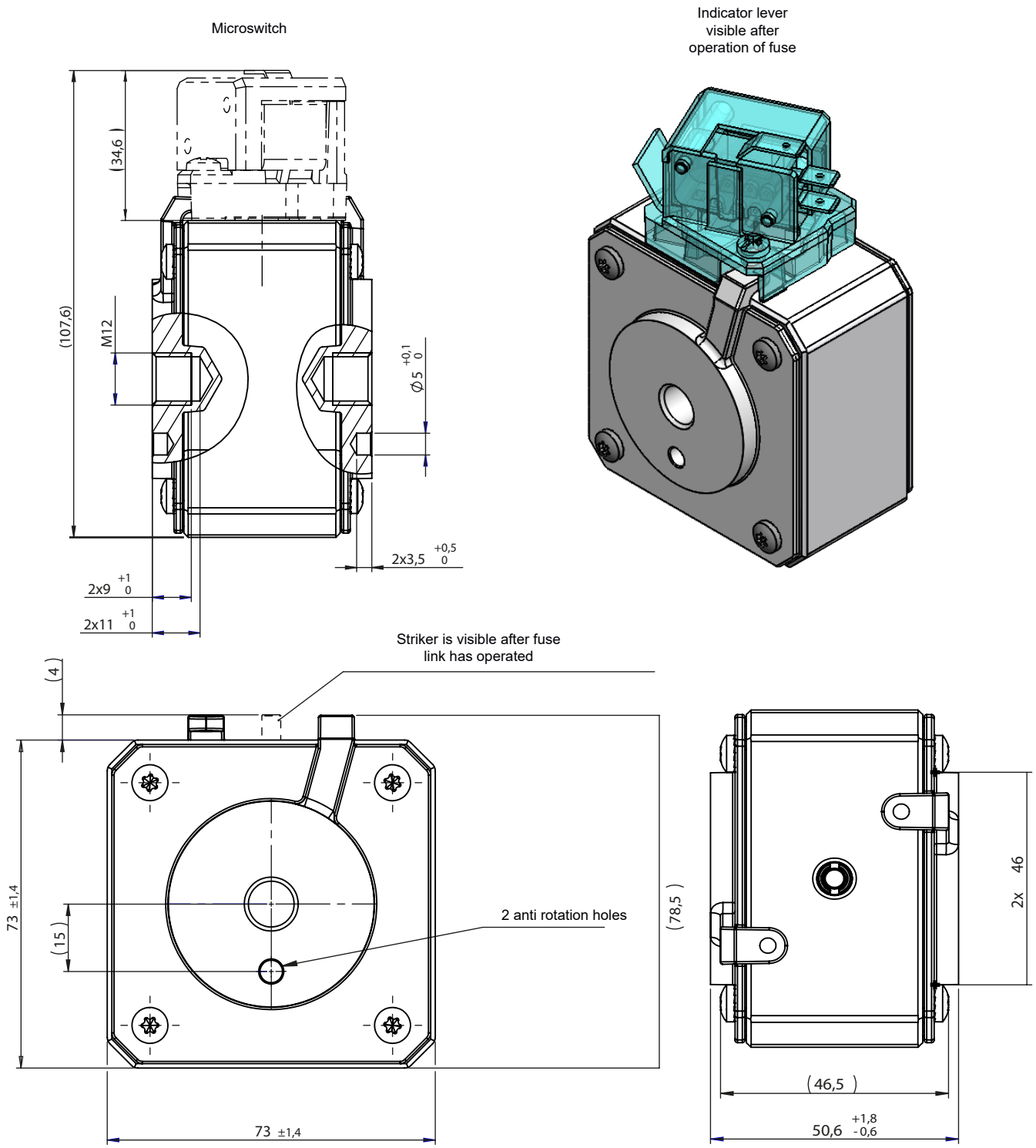

Dimensions in mm

© 2024 Mersen products have been designed by Mersen for a range of specific applications to be operated depending on particular specification and conditions. Mersen makes no representation or/and warranty, and waives any liability, either express or implied for products' reliability and life time or technical performance in case Mersen has not been provided with customer's specifications or if the products are not purchased directly from Mersen or its distributors and/or agents.

DIMENSIONS

size 33 type TTF reinforced (108835)

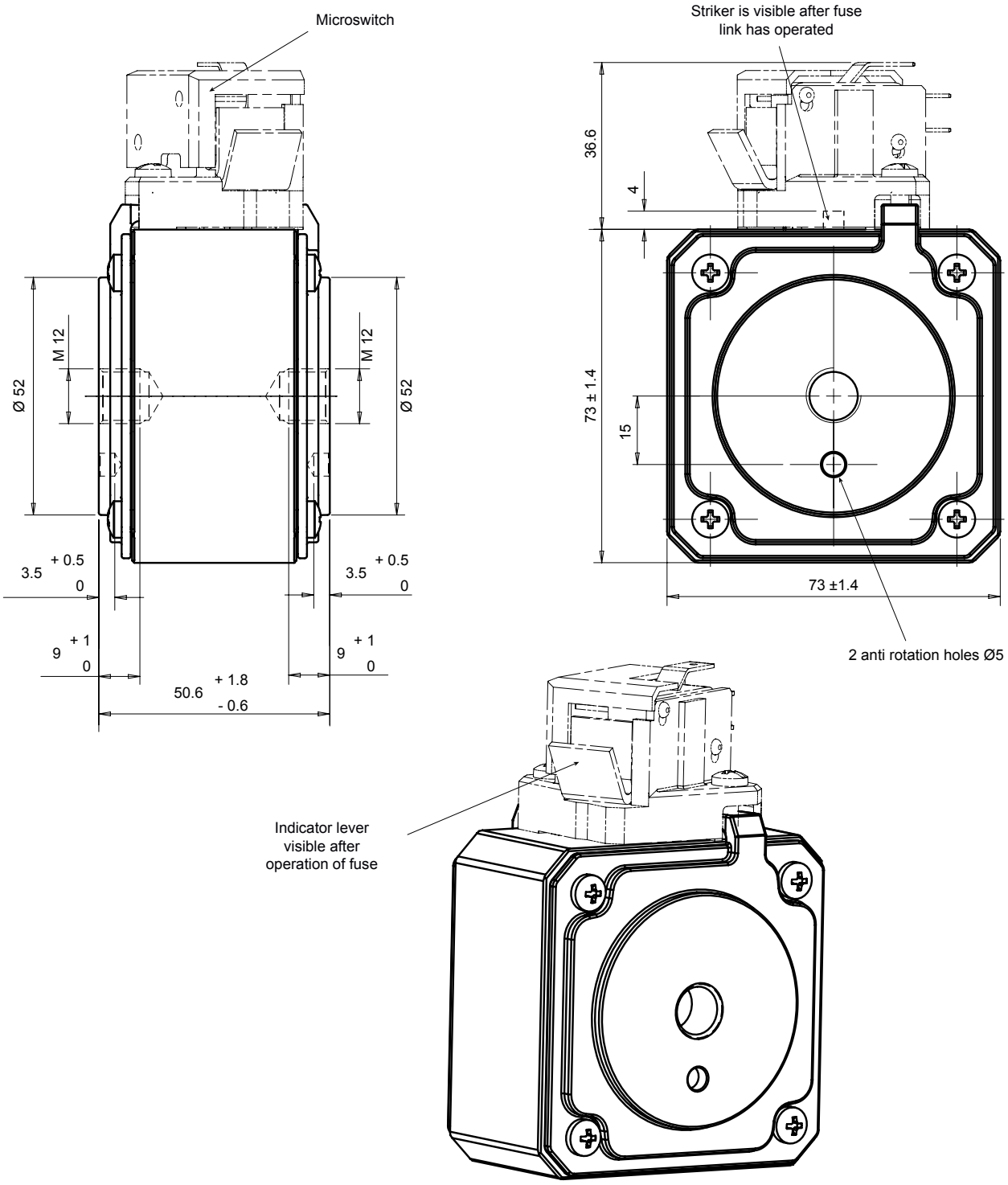

Dimensions in mm

EP.MERSEN.COM

© 2024 Mersen products have been designed by Mersen for a range of specific applications to be operated depending on particular specification and conditions. Mersen makes no representation or/and warranty, and waives any liability, either express or implied for products' reliability and life time or technical performance in case Mersen has not been provided with customer's specifications or if the products are not purchased directly from Mersen or its distributors and/or agents.

MERSEN Expertise, our source of energy

DIMENSIONS

size 33 type TTI reinforced

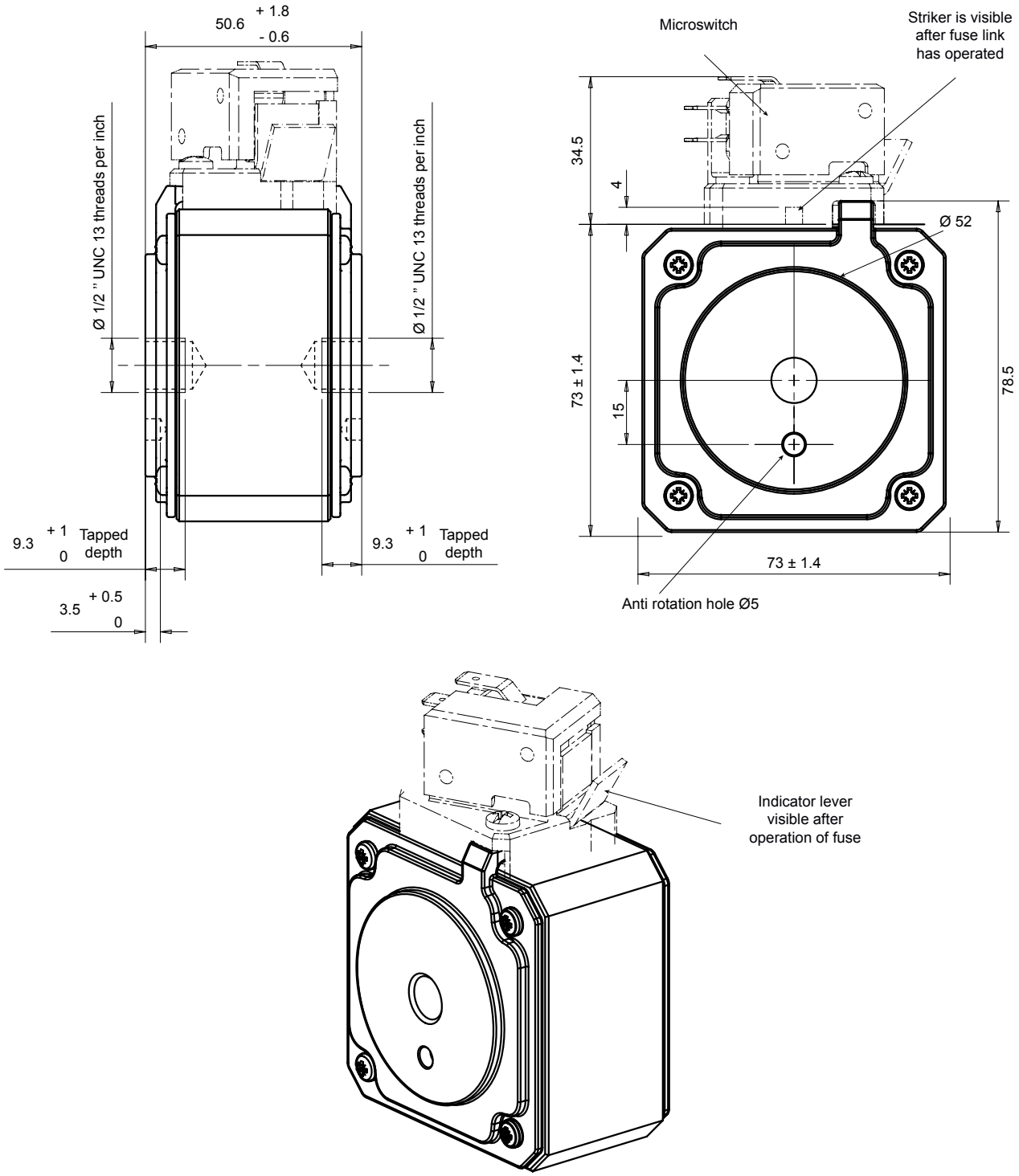

Dimensions in mm

© 2024 Mersen products have been designed by Mersen for a range of specific applications to be operated depending on particular specification and conditions. Mersen makes no representation or/and warranty, and waives any liability, either express or implied for products' reliability and life time or technical performance in case Mersen has not been provided with customer's specifications or if the products are not purchased directly from Mersen or its distributors and/or agents.

APPENDIX

Index

Catalog number	Item number	Description 1	Page
PC33UD69V450TF	W302170	6,9 URD 33 TT F 0450	2
PC33UD69V500TF	V300076	6,9 URD 33 TT F 0500	2
PC33UD69V550TF	W300077	6,9 URD 33 TT F 0550	2
PC33UD69V630TF	X300078	6,9 URD 33 TT F 0630	2
PC33UD69V700TF	Y300079	6,9 URD 33 TT F 0700	2
PC33UD69V800TF	Z300080	6,9 URD 33 TT F 0800	2
PC33UD69V900TF	A300081	6,9 URD 33 TT F 0900	2
PC33UD69V1000TF	B300082	6,9 URD 33 TT F 1000	2
PC33UD69V1100TF	C300083	6,9 URD 33 TT F 1100	2
PC33UD69V1250TF	D300084	6,9 URD 33 TT F 1250	2
PC33UD69V1400TF	E300085	6,9 URD 33 TT F 1400	2
PC33UD60V1500TF	Y300585	6 URD 33 TT F 1500	2
PC33UD60V1600TF	Z300586	6 URD 33 TT F 1600	2
PC33UD60V1800TF	A300587	6 URD 33 TT F 1800	2
PC33UD55V2000TF	B300588	5,5 URD 33 TT F 2000	2
PC33UD50V2250TF	K300757	5 URD 33 TT F 2250	2
PC33UD45V2500TF	L300758	4,5 URD 33 TTF 2500	2
A070UD33TTI450	X302171	A070 URD 33 TTI 0450	3
A070UD33TTI500	X300446	A070 URD 33 TTI 0500	3
A070UD33TTI550	Y300447	A070 URD 33 TTI 0550	3
A070UD33TTI630	Z300448	A070 URD 33 TTI 0630	3
A070UD33TTI700	A300449	A070 URD 33 TTI 0700	3
A070UD33TTI800	T300443	A070 URD 33 TTI 0800	3
A070UD33TTI900	B300450	A070 URD 33 TTI 0900	3
A070UD33TTI1000	C300451	A070 URD 33 TTI 1000	3
A070UD33TTI1100	D300452	A070 URD 33 TTI 1100	3
A070UD33TTI1250	E300453	A070 URD 33 TTI 1250	3
A070UD33TTI1400	F300454	A070 URD 33 TTI 1400	3
A065UD33TTI1500	F302064	A065 URD 33 TTI 1500	3
A065UD33TTI1600	S301086	A065 URD 33 TTI 1600	3
A065UD33TTI1800	T301087	A065 URD 33 TTI 1800	3
A060UD33TTI2000	V301088	A060 URD 33 TTI 2000	3
A055UD33TTI2250	W301089	A055 URD 33 TTI 2250	3
A050UD33TTI2500	Y300838	A050 URD 33 TTI 2500	3
PC33UD69V450A	T302168	6,9 URD 33 D08 A 0450	4
PC33UD69V500A	G300248	6,9 URD 33 D08 A 0500	4
PC33UD69V550A	H300249	6,9 URD 33 D08 A 0550	4
PC33UD69V630A	J300250	6,9 URD 33 D08 A 0630	4
PC33UD69V700A	K300251	6,9 URD 33 D08 A 0700	4
PC33UD69V800A	L300252	6,9 URD 33 D08 A 0800	4
PC33UD69V900A	M300253	6,9 URD 33 D08 A 0900	4
PC33UD69V1000A	N300254	6,9 URD 33 D08 A 1000	4
PC33UD69V1100A	P300255	6,9 URD 33 D08 A 1100	4
PC33UD69V1250A	Q300256	6,9 URD 33 D08 A 1250	4
PC33UD69V1400A	R300257	6,9 URD 33 D08 A 1400	4
PC33UD60V1500A	M235071	6 URD 33 D08 A 1500	4
PC33UD60V1600A	X301803	6 URD 33 D08 A 1600	4
PC33UD60V1800A	E301971	6 URD 33 D08 A 1800	4
PC33UD55V2000A	A302657	5,5 URD 33 D08 A 2000	4
PC33UD69V450D1A	V302169	6,9 URD 33 D11 A 0450	4
PC33UD69V500D1A	S300258	6,9 URD 33 D11 A 0500	4
PC33UD69V550D1A	T300259	6,9 URD 33 D11 A 0550	4
PC33UD69V630D1A	V300260	6,9 URD 33 D11 A 0630	4
PC33UD69V700D1A	W300261	6,9 URD 33 D11 A 0700	4
PC33UD69V800D1A	X300262	6,9 URD 33 D11 A 0800	4

© 2024 Mersen products have been designed by Mersen for a range of specific applications to be operated depending on particular specification and conditions. Mersen makes no representation or/and warranty, and waives any liability, either express or implied for products' reliability and life time or technical performance in case Mersen has not been provided with customer's specifications or if the products are not purchased directly from Mersen or its distributors and/or agents.

APPENDIX

Index

Catalog number	Item number	Description 1	Page
PC33UD69V900D1A	Y300263	6,9 URD 33 D11 A 0900	4
PC33UD69V10CD1A	Z300264	6,9 URD 33 D11 A 1000	4
PC33UD69V11CD1A	A300265	6,9 URD 33 D11 A 1100	4
PC33UD69V12CD1A	B300266	6,9 URD 33 D11 A 1250	4
PC33UD69V14CD1A	C300267	6,9 URD 33 D11 A 1400	4
PC33UD60V15CD1A	H301974	6 URD 33 D11 A 1500	4
PC33UD60V16CD1A	Z301437	6 URD 33 D11 A 1600	4
PC33UD55V20CD1A	S1015765	5,5 URD 33 D11A 2000A	4
A070UD33KI500	W300238	A 070 URD 33 KI 0500	5
A070UD33KI550	X300239	A 070 URD 33 KI 0550	5
A070UD33KI630	Y300240	A 070 URD 33 KI 0630	5
A070UD33KI700	Z300241	A 070 URD 33 KI 0700	5
A070UD33KI800	A300242	A 070 URD 33 KI 0800	5
A070UD33KI900	B300243	A 070 URD 33 KI 0900	5
A070UD33KI1000	C300244	A 070 URD 33 KI 1000	5
A070UD33KI1100	D300245	A 070 URD 33 KI 1100	5
A070UD33KI1250	E300246	A 070 URD 33 KI 1250	5
A070UD33KI1400	F300247	A 070 URD 33 KI 1400	5
A065UD33KI1600	E302063	A 065 URD 33 KI 1600	5
A070UD33LI450	Y302172	A 070 URD 33 LI 0450	5
A070UD33LI500	K300228	A 070 URD 33 LI 0500	5
A070UD33LI550	L300229	A 070 URD 33 LI 0550	5
A070UD33LI630	M300230	A 070 URD 33 LI 0630	5
A070UD33LI700	N300231	A 070 URD 33 LI 0700	5
A070UD33LI800	P300232	A 070 URD 33 LI 0800	5
A070UD33LI900	Q300233	A 070 URD 33 LI 0900	5
A070UD33LI1000	R300234	A 070 URD 33 LI 1000	5
A070UD33LI1100	S300235	A 070 URD 33 LI 1100	5
A070UD33LI1250	T300236	A 070 URD 33 LI 1250	5
A070UD33LI1400	V300237	A 070 URD 33 LI 1400	5
A060UD33LI1500	P300531	A 060 URD 33 LI 1500	5
A060UD33LI2000	J301078	A 060 URD 33 LI 2000	5
A065UD33LI1600	G301076	A 065 URD 33 LI 1600	5
A065UD33LI1800	H301077	A 065 URD 33 LI 1800	5
PC33UD69V500EF	Z300218	6,9 URD 33 E F 0500	6
PC33UD69V550EF	A300219	6,9 URD 33 E F 0550	6
PC33UD69V630EF	B300220	6,9 URD 33 E F 0630	6
PC33UD69V700EF	C300221	6,9 URD 33 E F 0700	6
PC33UD69V800EF	D300222	6,9 URD 33 E F 0800	6
PC33UD69V900EF	E300223	6,9 URD 33 E F 0900	6
PC33UD69V1000EF	F300224	6,9 URD 33 E F 1000	6
PC33UD69V1100EF	G300225	6,9 URD 33 E F 1100	6
PC33UD69V1250EF	H300226	6,9 URD 33 E F 1250	6
PC33UD69V1400EF	J300227	6,9 URD 33 E F 1400	6
PC33UD60V1600PA	W302722	6 URD 3 PA 1600	6
PC33UD69V1250PA	V302721	6,9 URD 3 PA 1250	6
PC33UD69V1400PA	P1028044	6,9 URD 3 PA 1400	6

© 2024 Mersen products have been designed by Mersen for a range of specific applications to be operated depending on particular specification and conditions. Mersen makes no representation or/and warranty, and waives any liability, either express or implied for products' reliability and life time or technical performance in case Mersen has not been provided with customer's specifications or if the products are not purchased directly from Mersen or its distributors and/or agents.

Mouser Electronics

Authorized Distributor

Click to View Pricing, Inventory, Delivery & Lifecycle Information:

Mersen:

B300266 B300588 E300246 A300265 B300082 C300267 M300253 V302169 V302721 X300078 X300262 Z300218 B300243 C300083 E300453 H300249 W300261 V300237 N300231 A300081 F302064 R300234 B300450 S300258 S301086 C300221 L300229 Z300080 X301803 D300245 R300257 A300219 D300084 W300077 Z300586 T300443 V300076 A300587 E300085 J301078 K300757 M300230 H301077 K300251 W301089 Y300447 Z300448 N300254 P300255 S300235 A300242 H301974 T300236 Y300240 Y300263 X300239 Y302172 A300449 F300247 F300454 T300259 T301087 Z300241 C300451 E301971 V301088 W300238 Y300838 B300220 D300452 F300224 K300228 P300531 V300260 X302171 D300222 G300248 G301076 Q300256 X300446 Y300585 Z301437 E300223 E302063 G300225 H300226 J300250 Y300079 J300227 Q300233 L300758 Z300264 C300244 L300252 P300232