SERIES

250GH 速断ヒューズ Fast Acting Fues

- しゃ断容量 Breaking Capacity.
- AC250V-100KA
- DC250V(L/R10ms)-100KA
- 最大アーク電圧 550V
- Maximum arc voltage:550V

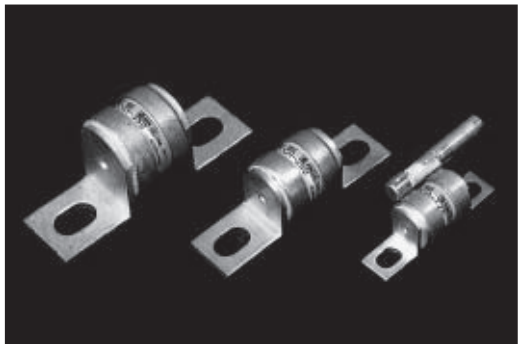

◆Feature/特長

◆Trip indicator or micro-switch can be fitted to most Fuses
◆Outstanding performance under repetitive current condition and long life expectancy.

●溶断表示ヒューズとマイクロスイッチがオプションで取付けられます。
●繰り返し電流に強い。
●BrushとGECとの互換性が有ります。

●UL 仕様 UL Specifications

Type	Ampere Rating	Pre-arc I^2t (A^2S)	Total I^2t (A^2S) atAC250V-100KA	Watts Loss (W)	Dimensions (mm)											Carton		
					A	B	C	D	E	F	G	H	W	T	M	(g)	Qty	Fig
250GH- 20	20A	20	160	1.8	55	41 ±3	25	27 max	17.5	9.5	6.5	19	12	2	—	27	20	1
250GH- 25	25A	33	270	2.6														
250GH- 32	32A	52	410	3.1														
250GH- 40	40A	74	600	3.7														
250GH- 50	50A	132	1060	5.5														
250GH- 63	63A	208	1680	6.5														
250GH- 80	80A	370	2800	8.0														
250GH-100	100A	530	4200	11.0														
250GH-125	125A	820	6700	14.0														
250GH-160	160A	1200	9000	18.0	78	57 ±3	29	33 max	23	14	9	26	20	3	—	76	10	
250GH-200	200A	2100	15000	24.0														
250GH-250	250A	3300	23000	34.0														
250GH-315	315A	6000	43000	35.0	87	57 ±3	30	41 max	31	16	11	36	25	3	—	134	10	
250GH-350	350A	7400	52000	45.0														

●警報ヒューズ付きを発注する場合の形式は末尾にSを付けて下さい。250GH-315S
●ULご注文の際には品名の末尾にULと記入して下さい。 250GH-315UL
◆With indicator, please put on "S" at the end of ampere rating. For example: 250GH-315S
◆When ordering a UL product, please put "UL" at the end of the ampere rating. For example: 250GH-315UL

●スタンダード仕様 Standard Specifications

Type	Ampere Rating	Pre-arc I^2t (A^2S)	Total I^2t (A^2S) atAC250V-100KA	Watts Loss (W)	Comparison with Competitors		Dimensions (mm)										Carton		
					BRUSH Types	GEC Types	A	B	C	D	E	F	G	H	W	T	M	(g)	Qty	Fig
250GH-20	20A	20	160	1.8	— — —	— — —	55	41 ±3	25	27 max	17.5	9.5	6.5	19	12	2	—	27	20	1
250GH-25	25A	33	270	2.6	240V-25LET	240V-GSA25														
250GH-32	32A	52	410	3.1	240V-32LET	— — —														
250GH-35	35A	54	420	3.5	240V-35LET	240V-GSA35														
250GH-40	40A	74	600	3.7	— — —	— — —														
250GH-50	50A	132	1060	5.2	240V-50LET	240V-GSA50														
250GH-63	63A	208	1680	6.5	240V-63LET	— — —														
250GH-80	80A	370	2800	8.0	240V-80LET	— — —														
250GH-100	100A	530	4200	11.0	240V-100LET	240V-GSA100														
250GH-125	125A	820	6700	14.0	240V-125LET	240V-GSD125														
250GH-160	160A	1200	9000	19.0	240V-160LMT	240V-GSA150	78	57 ±5	29	33	23	14	9	26	20	3	—	76	10	
250GH-200	200A	2100	15000	25.0	240V-200LMT	240V-GSA200														
250GH-250	250A	3300	23000	34.0	240V-250LMT	240V-GSA250														
250GH-315	315A	6000	43000	35.0	240V-315LMT	240V-GSD300	87	57 ±3	30	41 max	31	16	11	36	25	3	—	134	10	
250GH-350	350A	7400	52000	45.0	240V-350LMT	240V-GSD350														
250GH-400	400A	11000	75000	45.0	240V-400LMT	240V-GSA400	86	61 ±2	30	46 max	37	13	11	40	30	3	—	180	5	
250GH-450	450A	13500	92000	50.0	240V-450LMT	— — —														
250GHW-500	500A	24000	160000	50.0	240V-500LMMT	240V-GSA500	86	61 ±2	30	46 max	37	13	11	40	30	6	80	380	5	2
250GHW-630	630A	30000	205000	65.0	240V-630LMMT	240V-GSD600														
250GHW-710	710A	43000	280000	70.0	240V-710LMMT	240V-GSD700														
250GHW-800	800A	53000	355000	80.0	240V-800LMMT	— — —														

◆外形図 Outline Dimensions (m/m)

fig 1

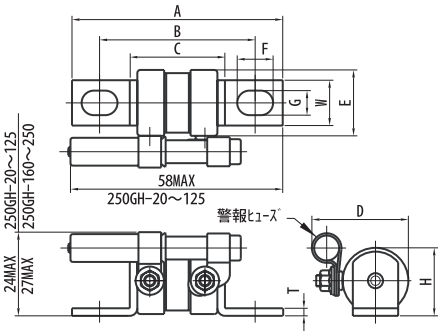

fig 2

