Honeywell

C7027A, C7035A, C7044A
MINIPEEPER ULTRAVIOLET FLAME DETECTOR

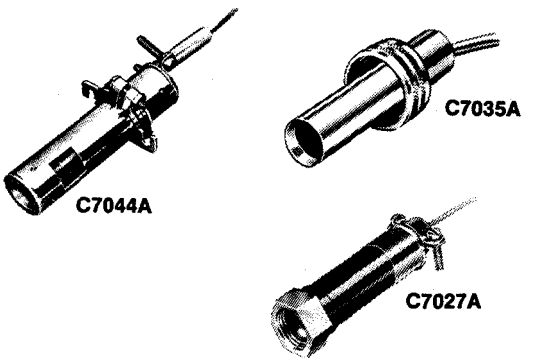

THE C7027A, C7035A, AND C7044A DETECT ULTRAVIOLET RADIATION EMITTED FROM ALL FLAMES. THEY ARE USED WITH FLAME SAFEGUARD CONTROLS TO PROVIDE SUPERVISION FOR GAS, OIL, OR COMBINATION GAS-OIL BURNERS.

❑ C7027A ☐ C7035A ☐ C7044A

- The **C7027A, C7035A,** and **C7044A** are used with the following:
  - -Flame Safeguard Programmers/ Amplifiers
    R4126 and **R4127/R7255B**
    R4140/R7249A
    R4150/R7259A
    R4795/R7290
  - -Flame Safeguard Primary Controls/ Amplifiers
    R4075C,D,E/R7249A
    R4138C,D/R7249A
  - —**RA890G** Protectorelay Primary Control
  - —**R7023C** Flame Detector Relay.

- The **C7044A** is also used with the following 50' Hz Flame Safeguard Controls/ Amplifiers:
  R4341/R7323
  R4343/R7323
  R4344/R7323
- The **C7027A** mounts on a 1 **/2** in. sighting pipe by means of an integral collar.
- The **C7035A** mounts on a 1 in. sighting pipe by means of an integral collar. A shield protects the sensing tube.
- The **C7035A** meets outdoor raintight requirements of Underwriters Laboratories Inc., NEMA 3, and NEMA 4.
- The **C7044A** mounts with a simple, l-screw bracket. Sensing tube enclosed in stainless steel housing.
- The **C7044A** is suitable for side or end viewing.
- Compact size makes the **C7027A** and **C7044A** particularly useful for blast tube mounting.
- Properly installed, the **C7027A** and **C7035A** are sealed against pressures as high as 5 psi **[34.5 kPa].**
- The **C7035A** ultraviolet sensing tube is field replaceable. The **C7027A** and **C7044A** sensing tubes are not field **replaceable—** use on an economical, throwaway basis.
- Two Minipeeper detectors can be wired in parallel for difficult sighting applications.

SPECIFICATIONS

STANDARD MODELS

C7027A MINIPEEPER ULTRAVIOLET FLAME DETECTOR
DETECTION: Detects ultraviolet radiation only.
AMBIENT OPERATING TEMPERATURE RATINGS: 0 F to +215 F [-18 C to +102 C], or -40 F to +215 F [−40 C to +102 C], depending on the model.
MAXIMUM PRESSURE RATING: 5 psi [34.5 kPa].
MOUNTING: Collar with standard 1/2 in. internal threads for mounting on a 1/2 in. sighting pipe.
WIRING CONNECTIONS: Two, 6 ft [1.83 m], color-coded, NEC Class 1 leadwires. (One model is available with 24 ft [7.32 m] leadwires.) Rear of detector has a clamp type connector for 1/2 in. flexible metallic conduit. (Models are available with 1/2 in. internally threaded spud connector instead of the clamp.)
DIMENSIONS: See Fig. 1.
REPLACEMENT PART: 129685 Flange Gasket NOTE: The UV sensing tube is not field replaceable.

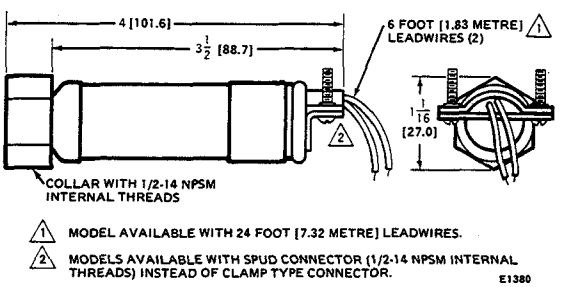

FIG. I- INSTALLATION DIMENSIONS OF THE **C7027A,** IN in. [mm IN BRACKETS].

C7035A MINIPEEPER ULTRAVIOLET FLAME DETECTOR
DETECTION: Detects ultraviolet radiation only.
AMBIENT OPERATING TEMPERATURE RATINGS: 0 F to 250 F [-18 C to +121 C], or -40 F to +250 F [−40 C to +121 Cl, depending on the model.
MAXIMUM PRESSURE RATING: 5 psi [34.5 kPa].
MOUNTING: Collarwith standard 1 in. internal threadsfor mounting on a 1 in. sighting pipe. (The DIN approved C7035A1064 has l-1 1 BSP.P1 threads.)
WIRING CONNECTIONS: Two, 6 ft [1.83 m], color-coded, NEC Class 1 leadwires. (One model is available with leadwires rated for 400 F [204.4 C], and one model is available with 12 ft [3.66 m] leadwires.) Rear of detector has 1/2-14 NPSM internal threads for connecting to a conduit. (The DIN approved C7035A1064 has 1/2-14 BSP-F threads.)
DIMENSIONS: See Fig. 2.
WEIGHT: 6 oz [0.17 kg].
REPLACEMENT PARTS:
129808 Flange Gasket.
129464M Ultraviolet Sensing Tube, 0 F to250 F [−18 C to+121 C].
129464N Ultraviolet Sensing Tube, -40 F to +250 F [-40 C to +121 C].

C7027A AND **C7035A**
APPROVALS:
UNDERWRITERS LABORATORIES INC. LISTED: File No. MP268; Guide No. MCCZ.
CANADIAN STANDARDS ASSOCIATION CERTIFIED: File No. LR1620; Guide No. 140-A-2.
FACTORY MUTUAL APPROVED.
DIN APPROVED MODELS: C7027A1056, C7035A1049, and C7035A1064.

Form Number **65-0062**
©**Honeywell** Inc. 1986

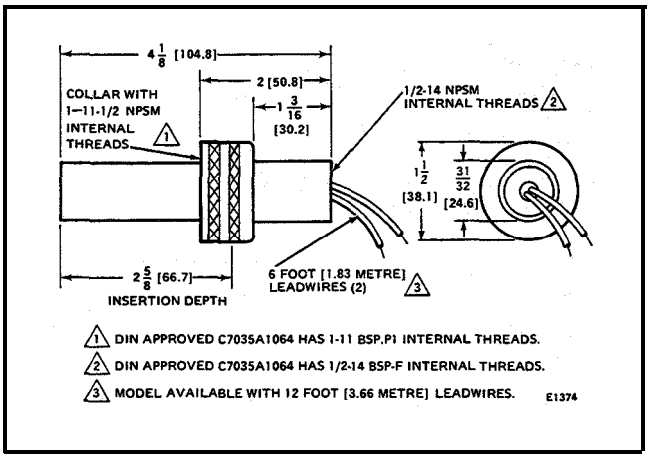

FIG. 2—**INSTALLATION** DIMENSIONS **OF THE C7035A,** IN in. [mm IN BRACKETS].

C7044A MINIPEEPER ULTRAVIOLET FLAME DETECTOR

DETECTION: Detects ultraviolet radiation only. Housing has 2 openings to permit viewing from either its end or its side. Side viewing is 1/ 8 as sensitive as end viewing.

AMBIENT OPERATING TEMPERATURE RATINGS: 0 F to 215 F [−18 c to +102 C].

MOUNTING: Bracket (included in 4074 BVK Bag Assembly), secured by two 8-32 RHIS (European M-4) screws (not included).

WIRING CONNECTIONS: Two, 6 ft [1.83 m], color-coded, NEC Class 1 leadwires. Rear of detector has a clamp type connector for 1/2 inch flexible metallic conduit.

DIMENSIONS: See Fig. 3.

WEIGHT: 10 oz [0.28 kg].

TABLE I-FLAME SIGNAL

FLAME DETECTOR	PLUG-IN FLAME SIGNAL AMPLIFIER (purple)	FLAME SAFEGUARD CONTROL(S)	MINIMUM ACCEPTABLE STEADY CURRENT (microamp)	MAXIMUM CURRENT EXPECTED (microamp)
C7027A C7035A, or C7044A	R7249A	R4075C,D,E; R4138C,D; R4140	3-1/2	7-1/2
	R7255B	R4126, R4127	4	a
	R7259A	R4150	4	a
	R7290A	R4795A.D	I-112	2-114
	None	RA890G, R7023C	1-1/2	2-1/4

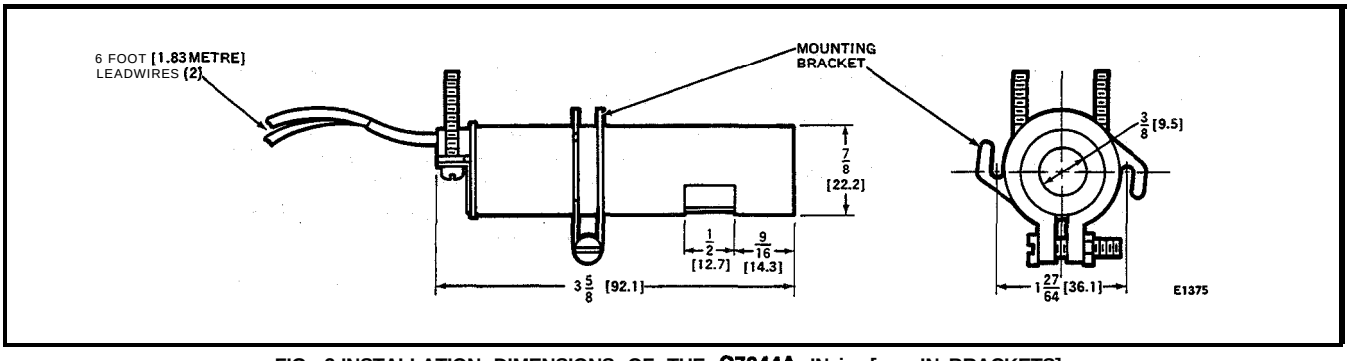

FIG. 3-INSTALLATION DIMENSIONS OF THE **C7044A,** IN in. [mm IN BRACKETS].