

Your problem: On one hand you need current limiting protection for medium voltage transformers and distribution systems that supply industrial plants, shopping centers, hospitals, schools, office buildings and underground residential service. On the other, you need high short-circuit current protection to avoid damages to busway, motors, switches and other equipment.

Our solution: Current-limiting power fuses are widely used in these applications because they afford excellent over-current protection and noiseless operation, and because they can be used in confined spaces. The amount of damage in the faulted area and the mechanical stress and strain on busway, switches and other apparatus carrying the fault current is proportional to the square of the current and to the length of time the fault persists. By limiting the let through energy at the fault, properly applied current-limiting fuses assist in limiting or preventing short-circuit damage to busway, circuit breakers, switches, and other electrical components. Current-limiting power fuses are manufactured in ratings ranging from 1kV through 38kV and in continuous current ratings from 0.5 amperes through 1200 amperes. Various designs are available for use with motors, transformers, capacitors, and circuit-protection equipment.

Want more information fast? For more technical or application-specific information, please call our Medium Voltage experts at 978-248-8914 or visit our website at **mersen.com.**

Medium Voltage Fuses

VARIOUS TYPES - DIFFERENT CONFIGURATIONS - MANY RATINGS - ONE SOLUTION

Transformer Protection

- Amp-Trap® CS-3 and 9F60/9F62 Series . . . . . MV 2
- Amp-Trap® & 9F62 Bolt-In Series . . . . . MV 14
- Amp-Trap® CL-14 Series . . . MV 21

Motor Protection

- Amp-Trap® & 9F60 Series . MV 25
- Amp-Trap® Bolt-in Series . . MV 31
- Amp-Trap® DIN-style Series . . . . . MV 37

Potential Transformer Protection

- Amp-Trap® & 9F60 Series PT Fuses . . . . . .MV 39

Capacitor Protection

- Amp-Trap® & 9F60 Series .MV 43

External Transformer Protection

- Sure Guard 9F59U Series ETP Fuses . . . . . MV 51

MERSEN

Expertise, our source of energy

Transformer Protection

Amp-Trap® CS-3 Series and 9F60/9F62 Series

MEDIUM VOLTAGE FUSES

2.75kV, 5.5kV, 8.25kV, 15.5kV, 25.8kV AND 38kV FERRULE MOUNTED FUSES



Mersen fuses for the protection of transformers and distribution lines deliver overload and short circuit protection. These current-limiting fuses will melt at current that can be as low as 1.7 times the fuse current ratings up to its maximum interrupting rating. These fuses are designed to withstand the transformer magnetizing inrush current. They have 2 (size C), 3 (size D) and 4 (size E) inch diameter barrels with ferrules and are mounted in spring reinforced clips.

FEATURES/BENEFITS:

- Amp-Trap CS-3 and 9F62 series are UL listed for compatibility with UL listed equipment.
- Ferrule mounting for standard clips and interchangeability with other brands of fuses.
- Current-limiting for superior equipment protection.
- Non-venting for silent operation.
- Metal embossed catalog number and manufacturing date for lasting identification.
- Outdoor usage for the 9F62 and 9F60 type EJO.
- Blown-fuse indicator to give positive identification of open fuse:
    - Amp-Trap, 2″ Barrel: 1 lb tripped force - 0.19 inch
    - Amp-Trap, 3″ Barrel: 1 lb tripped force - 0.44 inch
    - Amp-Trap, 3″ Barrel, Striker: 5 lb tripped force - 1 inch
    - 9F60/9F62: 0.125 lb tripped force – 0.20 inch
- Accessories - see Section FB

RATINGS

- See next page for listing

HIGHLIGHTS:

- E-Rated
- UL listed
- Outdoor use



APPLICATIONS:

- Protection for 2.4kV to 34.5kV transformers or distribution systems.

APPROVALS:

- Some UL listed to standard File E143362

© 2025 Mersen. All rights reserved. Mersen reserves the right to change, update, or correct, without notice, any information contained in this datasheet.

DEFINITIONS:

General Purpose Current-Limiting Fuses (Per IEEE Std C37.41-2016):

A general purpose current-limiting fuse is one that is capable of interrupting all currents, from its rated maximum interrupting current down to a low value equal to the current that causes melting of the fuse elements in one hour or more, under specified conditions.

E-Rating: E-Rated fuses operate as follows (per IEEE C37.42-2016):

- 100E or less – must melt in 300 seconds (5 mins.) at 200 to 240% of E (ampere) rating.
- Over 100E – must melt in 600 seconds (10 mins.) at 220 to 264% of E (ampere) rating.
- Example: A 100E fuse must melt in 300 seconds with an applied current of 200 to 240 amperes.

Power Distribution Fuses:

Defines fuses designed prior to the time where the ANSI standards defined the term "General Purpose" and do not meet all of the general purpose definition. These fuses are capable of interrupting all currents above 2.2 to 3 times the fuse's rated current up to its maximum interrupting rating.

FERRULE MOUNTED FUSES

Amp-Trap CS-3 Series: (Indoors or outdoors in a weatherproof enclosure)
A055F: 5.5kV – AC: 5E to 450E – 63kA I.R. Sym
A825X: 8.25kV – AC: 10E to 200E – 70kA I.R. Sym
A155F: 15.5kV – AC: 5E to 200E – 50 kA I.R. Sym

9F62 Series Type EJO-1: (Indoors and outdoors, to 80kA)
9F62: 5.5kV – AC: 25A to 450A – 50kA IR Sym
9F62: 8.3kV – AC: 20A to 250A – 50 kA IR Sym
9F62: 15.5kV – AC: 20A to 200A – 50 kA IR Sym

9F60 Series Type EJO-1: (Indoors and outdoors)
9F60: 2.75kV – AC: 1E to 200E – 50kA IR Sym
9F60: 5.5kV – AC: 0.5E to 200E – 50kA IR Sym
9F60: 8.25kV – AC: 0.5E to 200E – 50kA IR Sym
9F60: 15.5kV – AC: 0.5E to 100E – 50kA to 120kA IR Sym
9F60: 25.8kV – AC: 0.5E to 100E – 25kA to 35kA IR Sym
9F60: 38kV – AC: 1E to 80E – 13kA to 26kA IR Sym

9F60 Series Type EJ-1: (Indoors or outdoors in a weatherproof enclosure)
9F60: 2.75kV – AC: 1E to 200E – 47kA to 52kA IR Sym
9F60: 5.5kV – AC: 0.5E to 25E – 63kA IR Sym
9F60: 15.5kV – AC: 2E to 175E – 31kA to 82kA IR Sym
9F60: 25.8kV – AC: 0.5E to 2E – 35kA IR Sym

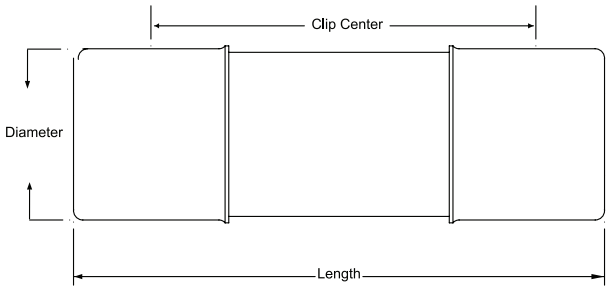

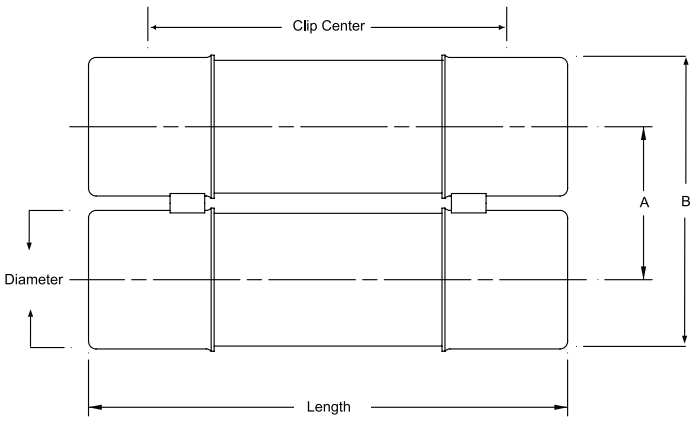

9F series A = 3.31 inches (84mm)

9F series B = 6.16 inches (160mm)

Amp-Trap series A = 3.63 inches (92 mm)

Amp-Trap series B = 6.63 inches (169 mm)

© 2025 Mersen. All rights reserved. Mersen reserves the right to change, update, or correct, without notice, any information contained in this datasheet.

2.75kV FERRULE MOUNTED FUSES:

2.75kV Power Distribution fuses – 9F60 series, E-Rated EJ-1

7" (178 mm) Clip Centers - Suitable for use indoors or in an enclosure only

Catalog No.	Amp Rating	No. of Barrels	Indicating	Diameter Inches (mm)	Length Inches (mm)	Max Voltage	Max IR RMS Sym	Fuse Support Indoor (EK-1)	Fuse Support Outdoor (EKO-1)	Fuse Disconnect Indoor (EK-3)	Fuse Disconnect Outdoor (EKO-3)
9F60CCB001	1E	1	Yes	2 (50.8)	9.18 (233)	2.75 kV	47kA	9F61AAB201	N/A	9F61AAB205	N/A
9F60CCB002	2E										
9F60CCB003	3E										
9F60CCB005	5E										
9F60CCB007	7E										
9F60CCB010	10E										
9F60CCB015	15E	1	Yes	2 (50.8)	9.18 (233)	2.75 kV	52kA	9F61AAB201	N/A	9F61AAB205	N/A
9F60CCB020	20E										
9F60CCB025	25E										
9F60ECB030	30E	1	Yes	3 (76.2)	10.88 (276)	2.75 kV	52kA	9F61AAB301	N/A	9F61AAB305	N/A
9F60ECB040	40E										
9F60ECB050	50E										
9F60ECB065	65E										
9F60ECB080	80E										
9F60ECB100	100E										
9F60GCB125	125E	2	Yes	3 (76.2)	10.88 (276)	2.75 kV	52kA	N/A	N/A	N/A	N/A
9F60GCB150	150E										
9F60GCB200	200E										

2.75kV Power Distribution fuses – 9F60 series, E-Rated EJ-1

9" (229 mm) Clip Centers - Suitable for use indoors or in an enclosure only

Catalog No.	Amp Rating	No. of Barrels	Indicating	Diameter Inches (mm)	Length Inches (mm)	Max Voltage	Max IR RMS Sym	Fuse Support Indoor (EK-1)	Fuse Support Outdoor (EKO-1)	Fuse Disconnect Indoor (EK-3)	Fuse Disconnect Outdoor (EKO-3)
9F60CEB001	1E	1	Yes	2 (50.8)	11.18 (284)	2.75 kV	52kA	9F61ACB201	N/A	9F61ACB205	N/A
9F60CEB002	2E										
9F60CEB003	3E										
9F60CEB005	5E										
9F60CEB007	7E										
9F60CEB010	10E										
9F60CEB015	15E										
9F60CEB020	20E										
9F60CEB025	25E										

© 2025 Mersen. All rights reserved. Mersen reserves the right to change, update, or correct, without notice, any information contained in this datasheet.

2.75kV Power Distribution fuses – 9F60 Series, E-Rated EJO-1

12" (305 mm) Clip Centers - Suitable for use indoors or outdoors

Catalog No	Amp Rating	No. of Barrels	Indicating	Diameter Inches (mm)	Length Inches (mm)	Max Voltage	Max IR RMS Sym	Fuse Support Indoor (EK-1)	Fuse Support Outdoor (EKO-1)	Fuse Disconnect Indoor (EK-3)	Fuse Disconnect Outdoor (EKO-3)
9F60DJB001	1E	1	Yes	2 (50.8)	14.18 (360)	2.75 kV	50kA	9F61AEG201	9F61CEF209	9F61AEG205	9F61CEF210
9F60DJB002	2E										
9F60DJB003	3E										
9F60DJB005	5E										
9F60DJB007	7E										
9F60DJB010	10E										
9F60DJB015	15E										
9F60DJB020	20E										
9F60DJB025	25E										
9F60FJB030	30E	1	Yes	3 (76.2)	15.88 (403)	2.75 kV	50kA	9F61AEB301	9F61CEF309	9F61AEB305	9F61CEF310
9F60FJB040	40E										
9F60FJB050	50E										
9F60FJB065	65E										
9F60FJB080	80E										
9F60FJB100	100E										
9F60FJL030	30E	1	No	3 (76.2)	15.88 (403)	2.75 kV	50kA	9F61AEB301	9F61CEF309	9F61AEB305	9F61CEF310
9F60FJL040	40E										
9F60FJL050	50E										
9F60FJL065	65E										
9F60FJL080	80E										
9F60FJL100	100E										
9F60HJB125	125E	2	Yes	3 (76.2)	15.88 (403)	2.75 kV	50kA	9F61AEB401	9F61CEF409	9F61AEB405	9F61CEF410
9F60HJB150	150E										
9F60HJB200	200E										

© 2025 Mersen. All rights reserved. Mersen reserves the right to change, update, or correct, without notice, any information contained in this datasheet.

5.5kV FERRULE MOUNTED FUSES:

5.5kV Power Distribution fuses – 9F60 Series, E-Rated EJ-1

9" (229 mm) Clip Centers - Suitable for use indoors or in an enclosure only

Catalog No.	Amp Rating	No. of Barrels	Indicating	Diameter Inches (mm)	Length Inches (mm)	Max Voltage	Max IR RMS Sym	Fuse Support Indoor (EK-1)	Fuse Support Outdoor (EKO-1)	Fuse Disconnect Indoor (EK-3)	Fuse Disconnect Outdoor (EKO-3)
9F60CED905	0.5E	1	Yes	2 (50.8)	11.18 (284)	5.5 kV	63kA	9F61ACB201	N/A	9F61ACB205	N/A
9F60CED001	1E										
9F60CED002	2E										
9F60CED003-S	3E										
9F60CED005	5E										
9F60CED007	7E										
9F60CED010	10E										
9F60CED015	15E										
9F60CED020	20E										
9F60CED025	25E										
9F60CEN010	10E		No								
9F60CEN015	15E										
9F60CEN020	20E										
9F60CEN025	25E										

5.5kV E-Rated Amp-Trap CS-3 Series – UL Listed

12" (305 mm) Clip Centers - Suitable for use indoors or in an enclosure only

Catalog No.	Amp Rating	No. of Barrels	Indicating	Diameter Inches (mm)	Length Inches (mm)	Max Voltage	Max IR RMS Sym	Fuse Support Indoor (EK-1)	Fuse Support Outdoor (EKO-1)	Fuse Disconnect Indoor (EK-3)	Fuse Disconnect Outdoor (EKO-3)
A055F1C0R0-5E	5E	1	Yes	2 (50.8)	14.18 (360)	5.5kV	63kA	9F61AEG201	N/A	9F61AEG205	N/A
A055F1C0R0-7E	7E										
A055F1C0R0-10E	10E										
A055F1C0R0-15E	15E										
A055F1C0R0-20E	20E										
A055F1C0R0-25E	25E										
A055F1C0R0-30E	30E										
A055F1C0R0-40E	40E										
A055F1C0R0-50E	50E										
A055F1C0R0-65E	65E										
A055F1D0R0-10E	10E	1	Yes	3 (76.2)	15.88 (403)	5.5kV	63kA	9F61AEB301	N/A	9F61AEB305	N/A
A055F1D0R0-15E	15E										
A055F1D0R0-20E	20E										
A055F1D0R0-25E	25E										
A055F1D0R0-30E	30E										
A055F1D0R0-40E	40E										
A055F1D0R0-50E	50E										
A055F1D0R0-65E	65E										
A055F1D0R0-80E	80E										
A055F1D0R0-100E	100E										
A055F1D0R0-125E	125E										
A055F1D0R0-150E	150E										
A055F1D0R0-175E	175E										
A055F1D0R0-200E	200E										
A055F2D0R0-250E	250E	2	Yes	3 (76.2)	15.88 (403)	5.5kV	63kA	–	N/A	–	N/A
A055F2D0R0-300E	300E										
A055F2D0R0-350E	350E										
A055F2D0R0-400E	400E										
A055F2D0R0-450E	450E										

© 2025 Mersen. All rights reserved. Mersen reserves the right to change, update, or correct, without notice, any information contained in this datasheet.

5.5kV E-Rated Amp-Trap CS-3 series – UL Listed
12" (305 mm) Clip Centers - Suitable for use indoors or in an enclosure only

Catalog No.	Amp Rating	No. of Barrels	Indicating	Diameter Inches (mm)	Length Inches (mm)	Max Voltage	Max IR RMS Sym	Fuse Support Indoor (EK-1)	Fuse Support Outdoor (EKO-1)	Fuse Disconnect Indoor (EK-3)	Fuse Disconnect Outdoor (EKO-3)
A055F1DSR0-10E	10E	1	Yes, Striker	3 (76.2)	15.88 (403)	5.5kV	63kA	9F61AEB301	N/A	9F61AEB305	N/A
A055F1DSR0-15E	15E										
A055F1DSR0-20E	20E										
A055F1DSR0-25E	25E										
A055F1DSR0-30E	30E										
A055F1DSR0-40E	40E										
A055F1DSR0-50E	50E										
A055F1DSR0-65E	65E										
A055F1DSR0-80E	80E										
A055F1DSR0-100E	100E										
A055F1DSR0-125E	125E										
A055F1DSR0-150E	150E										
A055F1DSR0-175E	175E										
A055F1DSR0-200E	200E										
A055F2DSR0-250E	250E	2	Yes, Striker	3 (76.2)	15.88 (403)	5.5kV	63kA	–	N/A	–	N/A
A055F2DSR0-300E	300E										
A055F2DSR0-350E	350E										
A055F2DSR0-400E	400E										
A055F2DSR0-450E	450E										

5.5.kV General Purpose fuses – 9F62 Series, EJO-1 – UL Listed
12" (305 mm) Clip Centers - Suitable for use indoors or outdoors

Catalog No.	Amp Rating	No. of Barrels	Indicating	Diameter Inches (mm)	Length Inches (mm)	Max Voltage	Max IR RMS Sym	Fuse Support Indoor (EK-1)	Fuse Support Outdoor (EKO-1)	Fuse Disconnect Indoor (EK-3)	Fuse Disconnect Outdoor (EKO-3)
9F62HCB025	25	1	Yes	2 (50.8)	14.18 (360)	5.5 kV	80kA	9F61AEG201	9F61CEF209	9F61AEG205	9F61CEF210
9F62HCB030	30										
9F62HCB040	40										
9F62HCB050	50										
9F62HCB065	65										
9F62DCB080	80	1	Yes	3 (76.2)	15.88 (403)	5.5 kV	80kA	9F61AEB301	9F61CEF309	9F61AEB305	9F61CEF310
9F62DCB100	100										
9F62DCB125	125										
9F62DCB150	150										
9F62DCB175	175										
9F62DCB200	200										
9F62FCB250	250	2	Yes	3 (76.2)	15.88 (403)	5.5 kV	80kA	9F61AEB401	9F61CEF409	9F61AEB405	9F61CEF410
9F62FCB300	300						50kA				
9F62FCB350	350										
9F62FCB400	400										
9F62FCB450	450										

© 2025 Mersen. All rights reserved. Mersen reserves the right to change, update, or correct, without notice, any information contained in this datasheet.

5.5.kV General Purpose fuses – 9F62 Series, EJO-1 – UL Listed

12″ (305 mm) Clip Centers - Suitable for use indoors or outdoors. Non-indicating for Class 1, Division 2 locations.

Catalog No.	Amp Rating	No. of Barrels	Indicating	Diameter Inches (mm)	Length Inches (mm)	Max Voltage	Max IR RMS Sym.	Fuse Support Indoor (EK-1)	Fuse Support Outdoor (EKO-1)	Fuse Disconnect Indoor (EK-3)	Fuse Disconnect Outdoor (EKO-3)
9F62HCJ025	25	1	No	2 (50.8)	14.13 (358.9)	5.5 kV	80kA	9F61AEG201	9F61CEF209	9F61AEG205	9F61CEF210
9F62HCJ030	30										
9F62HCJ040	40										
9F62HCJ050	50										
9F62HCJ065	65										
9F62DCJ080	80	1	No	3 (76.2)	15.88 (403.3)	5.5 kV	80kA	9F61AEB301	9F61CEF309	9F61AEB305	9F61CEF310
9F62DCJ100	100										
9F62DCJ125	125										
9F62DCJ150	150										
9F62DCJ175	175										
9F62DCJ200	200										
9F62FCJ250	250	2	No	3 (76.2)	15.88 (403.3)	5.5 kV	80kA	9F61AEB401	9F61CEF409	9F61AEB405	9F61CEF410
9F62FCJ300	300						50kA				
9F62FCJ350	350										
9F62FCJ400	400										
9F62FCJ450	450										

5.5kV Power Distribution fuses – 9F60 Series, E-Rated EJO-1

12″ (305 mm) Clip Centers - Suitable for use indoors or outdoors

Catalog No.	Amp Rating	No. of Barrels	Indicating	Diameter Inches (mm)	Length Inches (mm)	Max Voltage	Max IR RMS Sym	Fuse Support Indoor (EK-1)	Fuse Support Outdoor (EKO-1)	Fuse Disconnect Indoor (EK-3)	Fuse Disconnect Outdoor (EKO-3)
9F60DJD905	0.5E	1	Yes	2 (50.8)	14.18 (360)	5.5 kV	50kA	9F61AEG201	9F61CEF209	9F61AEG205	9F61CEF210
9F60DJD001	1E										
9F60DJD002	2E										
9F60DJD003	3E										
9F60DJD005	5E										
9F60DJD007	7E										
9F60DJD010	10E										
9F60DJD015	15E										
9F60DJD020	20E										
9F60DJD025	25E										
9F60FJD030	30E	1	Yes	3 (76.2)	15.88 (403)	5.5 kV	50kA	9F61AEB301	9F61CEF309	9F61AEB305	9F61CEF310
9F60FJD040	40E										
9F60FJD050	50E										
9F60FJD065	65E										
9F60FJD080	80E										
9F60FJD100	100E										
9F60HJD125	125E	2	Yes	3 (76.2)	15.88 (403)	5.5 kV	50kA	9F61AEB401	9F61CEF409	9F61AEB405	9F61CEF410
9F60HJD150	150E										
9F60HJD200	200E										

© 2025 Mersen. All rights reserved. Mersen reserves the right to change, update, or correct, without notice, any information contained in this datasheet.

8.25kV / 8.3kV FERRULE MOUNTED FUSES:

8.25kV E-Rated Amp-Trap CS-3 Series

12″ (305 mm) Clip Centers - Suitable for use indoors or in an enclosure only

Catalog No.	Amp Rating	No. of Barrels	Indicating	Diameter Inches (mm)	Length Inches (mm)	Max Voltage	Max IR RMS Sym	Fuse Support Indoor (EK-1)	Fuse Support Outdoor (EKO-1)	Fuse Disconnect Indoor (EK-3)	Fuse Disconnect Outdoor (EKO-3)
A825X10E-1	10E	1	Yes	3 (76.2)	15.88 (403)	8.25kV	70kA	9F61AEG301	N/A	9F61AEG305	N/A
A825X15E-1	15E										
A825X20E-1	20E										
A825X25E-1	25E										
A825X30E-1	30E										
A825X40E-1	40E										
A825X50E-1	50E										
A825X65E-1	65E										
A825X80E-1	80E										
A825X100E-1	100E										
A825X125E-1	125E	2	Yes	3 (76.2)	15.88 (403)	8.25kV	70kA	–	N/A	–	N/A
A825X150E-1	150E										
A825X200E-1	200E										

8.3kV General Purpose fuses – 9F62 Series, EJO-1 – UL Listed

12″ (305 mm) Clip Centers - Suitable for use indoors or outdoors

Catalog No.	Amp Rating	No. of Barrels	Indicating	Diameter Inches (mm)	Length Inches (mm)	Max Voltage	Max IR RMS Sym	Fuse Support Indoor (EK-1)	Fuse Support Outdoor (EKO-1)	Fuse Disconnect Indoor (EK-3)	Fuse Disconnect Outdoor (EKO-3)
9F62HCC020	20A	1	Yes	2 (50.8)	14.18 (360)	8.3 kV	50kA	9F61AEG201	9F61CEF209	9F61AEG205	9F61CEF210
9F62HCC025	25A										
9F62HCC030	30A										
9F62HCC040	40A										
9F62HCC050	50A										
9F62DCC065	65A	1	Yes	3 (76.2)	15.88 (403)	8.3 kV	50kA	9F61AEG301	9F61CEF309	9F61AEG305	9F61CEF310
9F62DCC080	80A										
9F62DCC100	100A										
9F62DCC125	125A										
9F62DCC150	150A										
9F62FCC175	175A	2	Yes	3 (76.2)	15.88 (403)	8.3 kV	50kA	9F61AEG401	9F61CEF409	9F61AEG405	9F61CEF410
9F62FCC200	200A										
9F62FCC250	250A										

8.25kV Power Distribution fuses – 9F60 Series, E-Rated EJO-1

12″ (305 mm) Clip Centers - Suitable for use indoors or outdoors

Catalog No.	Amp Rating	No. of Barrels	Indicating	Diameter Inches (mm)	Length Inches (mm)	Max Voltage	Max IR RMS Sym	Fuse Support Indoor (EK-1)	Fuse Support Outdoor (EKO-1)	Fuse Disconnect Indoor (EK-3)	Fuse Disconnect Outdoor (EKO-3)
9F60DJE905	0.5E	1	Yes	2 (50.8)	14.18 (360)	8.25 kV	50kA	9F61AEG201	9F61CEF209	9F61AEG205	9F61CEF210
9F60DJE001	1E										
9F60DJE002	2E										
9F60DJE003	3E										
9F60DJE005	5E										
9F60DJE007	7E										
9F60DJE010	10E										
9F60DJE015	15E										
9F60FJE020	20E	1	Yes	3 (76.2)	15.88 (403)	8.25 kV	50kA	9F61AEG301	9F61CEF309	9F61AEG305	9F61CEF310
9F60FJE025	25E										
9F60FJE030	30E										
9F60FJE040	40E										
9F60FJE050	50E										
9F60FJE065	65E										
9F60FJE080	80E										
9F60FJE100	100E										
9F60HJE125	125E	2	Yes	3 (76.2)	15.88 (403)	8.25 kV	50kA	9F61AEG401	9F61CEF409	9F61AEG405	9F61CEF410
9F60HJE150	150E										
9F60HJE200	200E										

© 2025 Mersen. All rights reserved. Mersen reserves the right to change, update, or correct, without notice, any information contained in this datasheet.

15kV / 15.5kV FERRULE MOUNTED FUSES:

15.5kV Power Distribution fuses – 9F60 Series, E-Rated EJ-1

12" (305 mm) Clip Centers - Suitable for use indoors or in an enclosure only

Catalog No.	Amp Rating	No. of Barrels	Indicating	Diameter Inches (mm)	Length Inches (mm)	Max Voltage	Max IR RMS Sym	Fuse Support Indoor (EK-1)	Fuse Support Outdoor (EKO-1)	Fuse Disconnect Indoor (EK-3)	Fuse Disconnect Outdoor (EKO-3)
9F60CJH002	2E	1	Yes	2 (50.8)	14.18 (360)	15.5 kV	82kA	9F61AEG201	N/A	9F61AEG205	N/A
9F60CJH003	3E										
9F60CJH005	5E										
9F60CJH007	7E										
9F60CJH010	10E										

15.5kV Power Distribution fuses – 9F60 Series, E-Rated EJO-1

15" (381 mm) Clip Centers - Suitable for use indoors or outdoors

Catalog No.	Amp Rating	No. of Barrels	Indicating	Diameter Inches (mm)	Length Inches (mm)	Max Voltage	Max IR RMS Sym	Fuse Support Indoor (EK-1)	Fuse Support Outdoor (EKO-1)	Fuse Disconnect Indoor (EK-3)	Fuse Disconnect Outdoor (EKO-3)
9F60DMH905	0.5E	1	Yes	2 (50.8)	17.2 (437)	15.5 kV	120kA	9F61AGG201 (13.8kV nominal - 95kV BIL) 9F61AGJ201 (14.4kV nominal - 110kV BIL)	9F61CGL209	9F61AGG205 (13.8kV nominal - 95kV BIL) 9F61AGJ205 (14.4kV nominal - 110kV BIL)	9F61CGL210
9F60DMH001	1E										
9F60DMH002	2E										
9F60DMH003	3E										
9F60DMH005	5E										
9F60DMH007	7E										
9F60DMH010	10E										
9F60FMH015	15E	1	Yes	3 (76.2)	18.88 (480)	15.5 kV	50kA	9F61AGG301 (13.8kV nominal - 95kV BIL) 9F61AGJ301 (14.4kV nominal - 110kV BIL)	9F61CGL309	9F61AGG305 (13.8kV nominal - 95kV BIL) 9F61AGJ305 (14.4kV nominal - 110kV BIL)	9F61CGL310
9F60FMH020	20E										
9F60FMH025	25E										
9F60FMH030	30E										
9F60FMH040	40E										
9F60FMH050	50E										
9F60HMH065	65E	2	Yes	3 (76.2)	18.88 (480)	15.5 kV	50kA	9F61AGG401 (13.8kV nominal - 95kV BIL) 9F61AGJ401 (14.4kV nominal - 110kV BIL)	9F61CGL409	9F61AGG405 (13.8kV nominal - 95kV BIL) 9F61AGJ405 (14.4kV nominal - 110kV BIL)	9F61CGL410
9F60HMH080	80E										
9F60HMH100	100E										

15.5kV General Purpose fuses – 9F62 Series, EJO-1 – UL Listed

15" (381 mm) Clip Centers - Suitable for use indoors or outdoors

Catalog No.	Amp Rating	No. of Barrels	Indicating	Diameter Inches (mm)	Length Inches (mm)	Max Voltage	Max IR RMS Sym	Fuse Support Indoor (EK-1)	Fuse Support Outdoor (EKO-1)	Fuse Disconnect Indoor (EK-3)	Fuse Disconnect Outdoor (EKO-3)
9F62DDD050	50A	1	Yes	3 (76.2)	18.88 (480)	15.5 kV	50kA	9F61AGG301 (13.8kV nominal - 95kV BIL) 9F61AGJ301 (14.4kV nominal - 110kV BIL)	9F61CGL309	9F61AGG305 (13.8kV nominal - 95kV BIL) 9F61AGJ305 (14.4kV nominal - 110kV BIL)	9F61CGL310
9F62DDD065	65A										
9F62DDD080	80A										
9F62DDD100	100A										
9F62FDD125	125A	2	Yes	3 (76.2)	18.88 (480)	15.5 kV	50kA	9F61AGG401 (13.8kV nominal - 95kV BIL) 9F61AGJ401 (14.4kV nominal - 110kV BIL)	9F61CGL409	9F61AGG405 (13.8kV nominal - 95kV BIL) 9F61AGJ405 (14.4kV nominal - 110kV BIL)	9F61CGL410
9F62FDD150	150A										
9F62FDD175	175A										
9F62FDD200	200A										

© 2025 Mersen. All rights reserved. Mersen reserves the right to change, update, or correct, without notice, any information contained in this datasheet.

15.5kV E-Rated Amp-Trap CS-3 series – UL Listed
15" (381 mm) Clip Centers - Suitable for use indoors or in an enclosure only

Catalog No.	Amp Rating	No. of Barrels	Indicating	Diameter Inches (mm)	Length Inches (mm)	Max Voltage	Max IR RMS Sym	Fuse Support Indoor (EK-1)	Fuse Support Outdoor (EKO-1)	Fuse Disconnect Indoor (EK-3)	Fuse Disconnect Outdoor (EKO-3)
A155F1CORO-5E	5E	1	Yes	2 (50.8)	17.03 (433)	15.5kV	50kA	9F61AGG201 (13.8kV nominal - 95kV BIL) 9F61AGJ201 (14.4kV nominal - 110kV BIL)	N/A	9F61AGG205 (13.8kV nominal - 95kV BIL) 9F61AGJ205 (14.4kV nominal - 110kV BIL)	N/A
A155F1CORO-7E	7E										
A155F1CORO-10E	10E										
A155F1CORO-15E	15E										
A155F1CORO-20E	20E										
A155F1CORO-25E	25E										
A155F1CORO-30E	30E										
A155F1DORO-10E	10E	1	Yes	3 (76.2)	18.87 (479)	15.5kV	50kA	9F61AGG301 (13.8kV nominal - 95kV BIL) 9F61AGJ301 (14.4kV nominal - 110kV BIL)	N/A	9F61AGG305 (13.8kV nominal - 95kV BIL) 9F61AGJ305 (14.4kV nominal - 110kV BIL)	N/A
A155F1DORO-15E	15E										
A155F1DORO-20E	20E										
A155F1DORO-25E	25E										
A155F1DORO-30E	30E										
A155F1DORO-40E	40E										
A155F1DORO-50E	50E										
A155F2DORO-65E	65E	2	Yes	3 (76.2)	18.87 (479)	15.5kV	50kA	–	N/A	–	N/A
A155F2DORO-80E	80E										
A155F2DORO-100E	100E										

15.5kV E-Rated Amp-Trap CS-3 series with Striker – UL Listed
15" (381 mm) Clip Centers - Suitable for use indoors or in an enclosure only

Catalog No.	Amp Rating	No. of Barrels	Indicating	Diameter Inches (mm)	Length Inches (mm)	Max Voltage	Max IR RMS Sym	Fuse Support Indoor (EK-1)	Fuse Support Outdoor (EKO-1)	Fuse Disconnect Indoor (EK-3)	Fuse Disconnect Outdoor (EKO-3)
A155F1DSRO-10E	10E	1	Yes, Striker	3 (76.2)	18.87 (479)	15.5kV	50kA	9F61AGG301 (13.8kV nominal - 95kV BIL) 9F61AGJ301 (14.4kV nominal - 110kV BIL)	N/A	9F61AGG305 (13.8kV nominal - 95kV BIL) 9F61AGJ305 (14.4kV nominal - 110kV BIL)	N/A
A155F1DSRO-15E	15E										
A155F1DSRO-20E	20E										
A155F1DSRO-25E	25E										
A155F1DSRO-30E	30E										
A155F1DSRO-40E	40E										
A155F1DSRO-50E	50E										
A155F2DSRO-65E	65E	2	Yes, Striker	3 (76.2)	18.87 (479)	15.5kV	50kA	–	N/A	–	N/A
A155F2DSRO-80E	80E										
A155F2DSRO-100E	100E										

15.5kV E-Rated Amp-Trap CS-3 series – UL Listed
18" (457 mm) Clip Centers - Suitable for use indoors or in an enclosure only

Catalog No.	Amp Rating	No. of Barrels	Indicating	Diameter Inches (mm)	Length Inches (mm)	Max Voltage	Max IR RMS Sym	Fuse Support Indoor (EK-1)	Fuse Support Outdoor (EKO-1)	Fuse Disconnect Indoor (EK-3)	Fuse Disconnect Outdoor (EKO-3)
A155F1DORO-65E	65E	1	Yes	3 (76.2)	21.75 (552)	15.5kV	50kA	–	N/A	–	N/A
A155F1DORO-80E	80E										
A155F1DORO-100E	100E										
A155F2DORO-125E	125E	2	Yes	3 (76.2)	21.75 (552)	15.5kV	50kA	–	N/A	–	N/A
A155F2DORO-150E	150E										
A155F2DORO-175E	175E										
A155F2DORO-200E	200E										

15.5kV E-Rated Amp-Trap CS-3 series with Striker – UL Listed
18" (457 mm) Clip Centers - Suitable for use indoors or in an enclosure only

Catalog No.	Amp Rating	No. of Barrels	Indicating	Diameter Inches (mm)	Length Inches (mm)	Max Voltage	Max IR RMS Sym	Fuse Support Indoor (EK-1)	Fuse Support Outdoor (EKO-1)	Fuse Disconnect Indoor (EK-3)	Fuse Disconnect Outdoor (EKO-3)
A155F1DSRO-65E	65E	1	Yes, Striker	3 (76.2)	21.75 (552)	15.5kV	50kA	–	N/A	–	N/A
A155F1DSRO-80E	80E										
A155F1DSRO-100E	100E										
A155F2DSRO-125E	125E	2	Yes, Striker	3 (76.2)	21.75 (552)	15.5kV	50kA	–	N/A	–	N/A
A155F2DSRO-150E	150E										
A155F2DSRO-175E	175E										
A155F2DSRO-200E	200E										

© 2025 Mersen. All rights reserved. Mersen reserves the right to change, update, or correct, without notice, any information contained in this datasheet.

25.8kV FERRULE MOUNTED FUSES:

25.8kV Power Distribution fuses – 9F60 Series, E-Rated EJ-1

15" (381 mm) Clip Centers - Suitable for use indoors or in an enclosure only

Catalog No.	Amp Rating	No. of Barrels	Indicating	Diameter Inches (mm)	Length Inches (mm)	Max Voltage	Max IR RMS Sym	Fuse Support Indoor (EK-1)	Fuse Support Outdoor (EKO-1)	Fuse Disconnect Indoor (EK-3)	Fuse Disconnect Outdoor (EKO-3)
9F60CMJ905	0.5E	1	Yes	2 (50.8)	17.20 (437)	25.8 kV	35kA*	–	N/A	–	N/A
9F60CMJ001	1E										
9F60CMJ002	2E										

25.8kV Power Distribution fuses – 9F60 Series, E-Rated EJO-1

21" (533 mm) Clip Centers - Suitable for use indoors or outdoors

Catalog No.	Amp Rating	No. of Barrels	Indicating	Diameter Inches (mm)	Length Inches (mm)	Max Voltage	Max IR RMS Sym	Fuse Support Indoor (EK-1)	Fuse Support Outdoor (EKO-1)	Fuse Disconnect Indoor (EK-3)	Fuse Disconnect Outdoor (EKO-3)
9F60DNJ905	0.5E	1	Yes	2 (50.8)	23.18 (589)	25.8 kV	35kA*	9F61AHM201	9F61CHM209	9F61AHM205	9F61CHM210
9F60DNJ001	1E										
9F60DNJ002	2E										
9F60DNJ003	3E										
9F60DNJ005	5E										
9F60DNJ007	7E										
9F60DNJ010	10E										
9F60FNJ015	15E	1	Yes	3 (76.2)	24.81 (630)	25.8 kV	25kA	9F61AHM301	9F61CHM309	9F61AHM305	9F61CHM310
9F60FNJ020	20E										
9F60FNJ025	25E										
9F60FNJ030	30E										
9F60FNJ040	40E										
9F60FNJ050	50E										
9F60HNJ065	65E	2	Yes	3 (76.2)	24.81 (630)	25.8 kV	25kA	9F61AHM401	9F61CHM409	9F61AHM405	9F61CHM410
9F60HNJ080	80E										
9F60HNJ100	100E										

** These fuses were designed and originally tested at a higher maximum interrupting rating value. Consult factory for further information.*

© 2025 Mersen. All rights reserved. Mersen reserves the right to change, update, or correct, without notice, any information contained in this datasheet.

38kV FERRULE MOUNTED FUSES:

38kV Power Distribution fuses – 9F60 Series, E-Rated EJO-1

27" (686 mm) Clip Centers - Suitable for use indoors or outdoors



Catalog No.	Amp Rating	No. of Barrels	Indicating	Diameter Inches (mm)	Length Inches (mm)	Max Voltage	Max IR RMS Sym	Fuse Support Indoor (EK-1)	Fuse Support Outdoor (EKO-1)	Fuse Disconnect Indoor (EK-3)	Fuse Disconnect Outdoor (EKO-3)
9F60FPK001	1E	1	Yes	3 (76.2)	30.81 (783)	38 kV	50kA	–	9F61CJN309	–	9F61CJN310
9F60FPK002	2E										
9F60FPK003	3E										
9F60FPK005	5E										
9F60FPK007	7E										
9F60FPK010	10E										
9F60FPK015	15E	1	Yes	3 (76.2)	30.81 (783)	38 kV	13kA	–	9F61CJN309	–	9F61CJN310
9F60FPK020	20E										
9F60FPK025	25E										
9F60FPK030	30E										
9F60FPK040	40E										
9F60HPK050	50E	2	Yes	3 (76.2)	30.81 (783)	38 kV	13kA	–	9F61CJN409	–	9F61CJN410
9F60HPK065	65E										
9F60HPK080	80E										
9F60FPT001	1E	1	No	3 (76.2)	30.81 (783)	38 kV	50kA	–	9F61CJN309	–	9F61CJN310
9F60FPT002	2E										
9F60FPT003	3E										
9F60FPT005	5E										
9F60FPT007	7E										
9F60FPT010	10E										
9F60FPT015	15E	1	No	3 (76.2)	30.81 (783)	38 kV	13kA	–	9F61CJN309	–	9F61CJN310
9F60FPT020	20E										
9F60FPT025	25E										
9F60FPT030	30E										
9F60FPT040	40E										
9F60HPT050	50E	2	No	3 (76.2)	30.81 (783)	38 kV	13kA	–	9F61CJN409	–	9F61CJN410
9F60HPT065	65E										
9F60HPT080	80E										

© 2025 Mersen. All rights reserved. Mersen reserves the right to change, update, or correct, without notice, any information contained in this datasheet.

Transformer Protection

Amp-Trap® and 9F62 Bolt-In Series

MEDIUM VOLTAGE FUSES

5.0kV, 5.5kV, 7.2kV, 8.25kV, AND 15.5kV BOLT-IN FUSES



Mersen fuses for the protection of transformers and distribution lines deliver overload and short circuit protection. These current-limiting fuses will melt at current that can be as low as 1.7 times the fuse current ratings up to its maximum interrupting rating. These fuses are designed to withstand the transformer magnetizing inrush current. They are single, double, triple or quadruple barrels 3 inch diameter (size D) with end mounts designed for bolting directly to equipment bus or terminal pads.

FEATURES/BENEFITS:

- UL listed for compatibility with UL listed equipment.
- Bolt-In mounting for direct connection to bus or terminals.
- Current-limiting for superior equipment protection.
- Non-venting for silent operation.
- Metal embossed catalog number and manufacturing date for lasting identification.
- Outdoor usage for the 9F62.
- Blown-fuse indicator to give positive identification of open fuse.
    - Amp-Trap: 1 lb tripped force - 0.44 Inch
    - 9F62: 0.125 lb tripped force – 0.20 Inch

HIGHLIGHTS:

- E-Rated
- UL listed
- Outdoor use

APPLICATIONS:

- Protection for 5.5kV to 15.5kV transformers or distribution systems.

Ratings:

Amp-Trap Bolt-in Series

A050B:

- **Volts:** 5.0kV AC
- **Amps:** 1200E
- **IR:** 59kA Sym

A055B:

- **Volts:** 5.5kV AC
- **Amps:** 10 to 900E
- **IR:** 50kA-63kA

A072B:

- **Volts:** 7.2kVAC
- **Amps:** 250 to 400E
- **IR:** 65kA Sym

A083B:

- **Volts:** 8.25kVAC
- **Amps:** 10 to 200E
- **IR:** 70kA Sym

A155B:

- **Volts:** 15.5kVAC
- **Amps:** 10 to 300E
- **IR:** 50kA Sym

9F62 Series Type EJO-1

9F62

- **Volts:** 5.5kVAC, 15.5VAC
- **Amps:** 300 to 900A
- **IR:** 50kA Sym

APPROVALS:

- Some UL Listed to standard File E143362

© 2025 Mersen. All rights reserved. Mersen reserves the right to change, update, or correct, without notice, any information contained in this datasheet.

DEFINITIONS:

General Purpose Current-Limiting Fuses (Per IEEE Std C37.41-2016):

A general purpose current-limiting fuse is one that is capable of interrupting all currents, from its rated maximum interrupting current down to a low value equal to the current that causes melting of the fuse elements in one hour or more, under specified conditions.

E-Rating: E-Rated fuses operate as follows (Per IEEE C37.42-2016):

- 100E or less – must melt in 300 seconds (5 mins.) at 200 to 240% of E (ampere) rating.
- Over 100E – must melt in 600 seconds (10 mins.) at 220 to 264% of E (ampere) rating.
- Example: A 100E fuse must melt in 300 seconds with an applied current of 200 to 240 amperes.

5.0kV / 5.5kV BOLT-IN FUSES:

5.5kV E-Rated Amp-Trap Bolt-In Series – UL Listed

Suitable for use indoors or in an enclosure only

Catalog Number	Amp Rating	No. of Barrels	Indicating	Max Voltage	Max IR RMS Sym	Figure
A055B1DAR0-10E	10E	1	Yes	5.5kV	63kA	A
A055B1DAR0-15E	15E					
A055B1DAR0-20E	20E					
A055B1DAR0-25E	25E					
A055B1DAR0-30E	30E					
A055B1DAR0-40E	40E					
A055B1DAR0-50E	50E					
A055B1DAR0-65E	65E					
A055B1DAR0-80E	80E					
A055B1DAR0-100E	100E					
A055B1DAR0-125E	125E					
A055B1DAR0-150E	150E					
A055B1DAR0-175E	175E					
A055B1DAR0-200E	200E					

Figure A

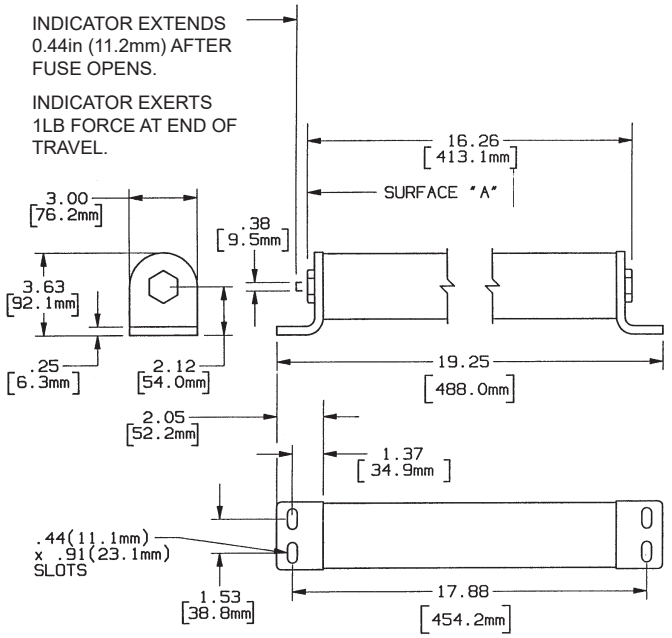

© 2025 Mersen. All rights reserved. Mersen reserves the right to change, update, or correct, without notice, any information contained in this datasheet.

5.0kV / 5.5kV BOLT-IN FUSES:

5.5kV E-Rated Amp-Trap Bolt-In Series – UL Listed
Suitable for use indoors or in an enclosure only

Catalog Number	Amp Rating	No. of Barrels	Indicating	Max Voltage	Max IR RMS Sym	Figure
A055B2DAR0-250E	250E	2	Yes	5.5kV	63kA	B
A055B2DAR0-300E	300E					
A055B2DAR0-350E	350E					
A055B2DAR0-400E	400E					
A055B2DAR0-450E	450E					
A055B2D0R0-450E	450E	2	Yes	5.5kV	63kA	C
A055B2D0R0-500E	500E					
A055B2D0R0-600E	600E					
A055B3D0R0-750E	750E	3	Yes	5.5kV	63kA	D
A055B3D0R0-900E	900E					

Figure B

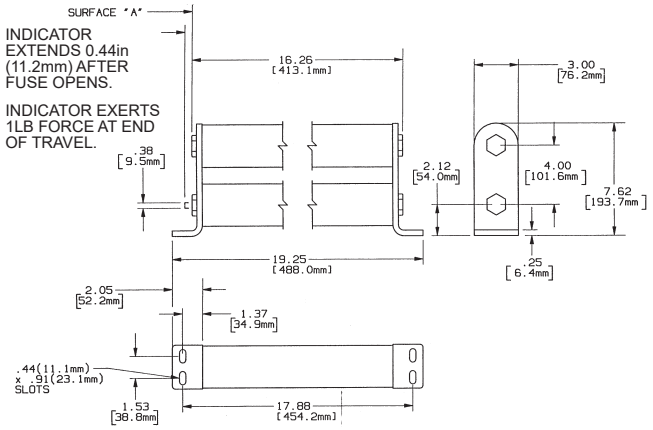

Figure C

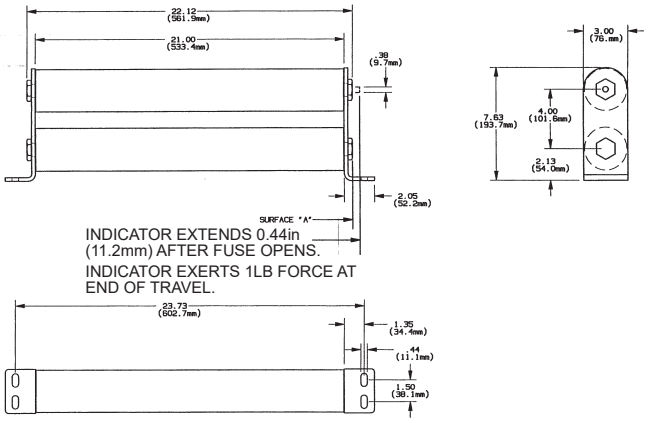

Figure D

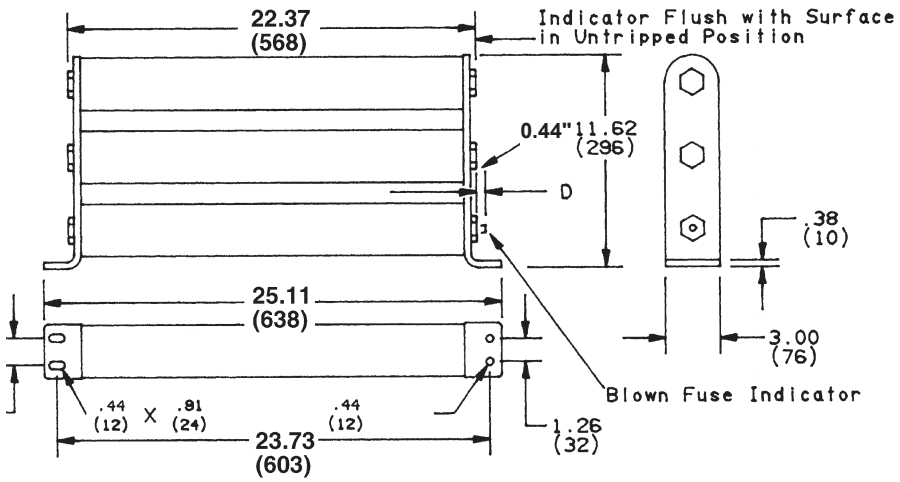

© 2025 Mersen. All rights reserved. Mersen reserves the right to change, update, or correct, without notice, any information contained in this datasheet.

5.0kV / 5.5kV BOLT-IN FUSES:

5.0kV E-Rated Amp-Trap Bolt-In Series

Suitable for use indoors or in an enclosure only

Catalog No.	Amp Rating	No. of Barrels	Indicating	Max Voltage	Max IR RMS Sym	Figure
A050B4D0R0-1200E	1200E	4	Yes	5.0kV	59kA	E

Figure E

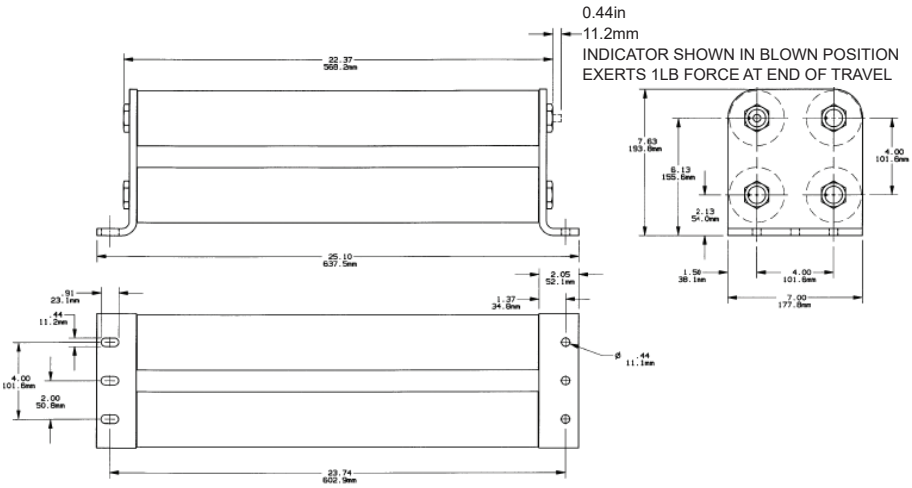

5.5kV General Purpose fuses – 9F62 Series, EJO-1 – UL Listed

Suitable for use indoors or outdoors

Catalog No.	Amp Rating	No. of Barrels	Indicating	Max Voltage	Max IR RMS Sym	Figure	Fuse Support Indoor (EK-1)	Fuse Support Outdoor (EKO-1)
9F62KCB500	500A	4	Yes	5.5 kV	50kA	F	9F61AKB001	9F61CKF009
9F62KCB600	600A							
9F62KCB700	700A							
9F62KCB800	800A							
9F62KCB900	900A							

Figure F

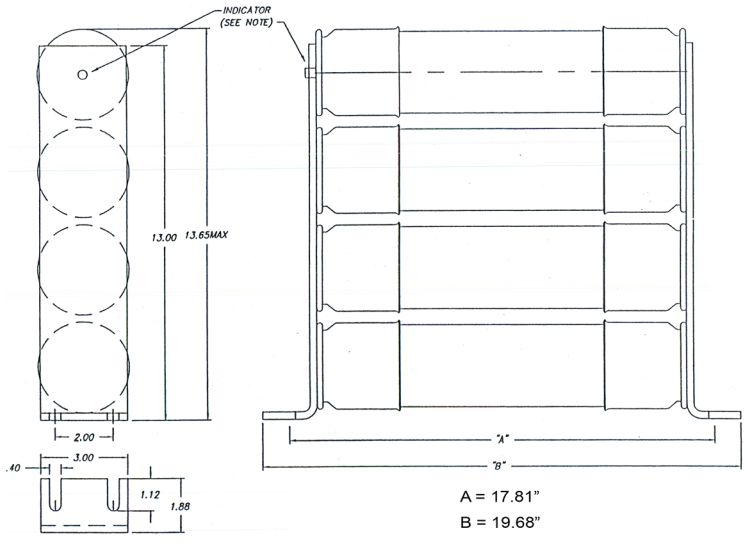

© 2025 Mersen. All rights reserved. Mersen reserves the right to change, update, or correct, without notice, any information contained in this datasheet.

7.2kV / 8.25kV BOLT-IN FUSES:

7.2kV E-Rated Amp-Trap Bolt-In Series
Suitable for use indoors or in an enclosure only

Catalog No.	Amp Rating	No. of Barrels	Indicating	Max Voltage	Max IR RMS Sym	Figure
A072B2D0R0-250E	250E	2	Yes	7.9kV	65kA	G
A072B2D0R0-300E	300E					
A072B2D0R0-350E	350E					
A072B2D0R0-400E	400E					

Figure G

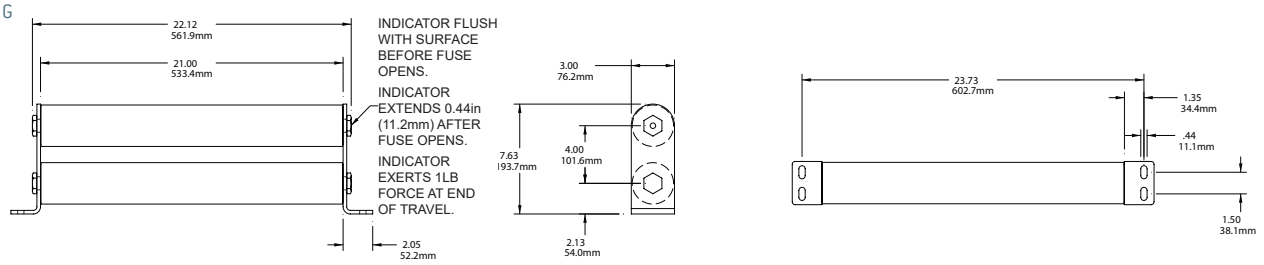

8.25kV E-Rated Amp-Trap Bolt-In Series
Suitable for use indoors or in an enclosure only

Catalog No.	Amp Rating	No. of Barrels	Indicating	Max Voltage	Max IR RMS Sym	Figure
A083B1DAR0-10E	10E	1	Yes	8.25kV	70kA	H
A083B1DAR0-15E	15E					
A083B1DAR0-20E	20E					
A083B1DAR0-25E	25E					
A083B1DAR0-30E	30E					
A083B1DAR0-40E	40E					
A083B1DAR0-50E	50E					
A083B1DAR0-65E	65E					
A083B1DAR0-80E	80E					
A083B1DAR0-100E	100E					
A083B2DAR0-125E	125E	2	Yes			I
A083B2DAR0-150E	150E					
A083B2DAR0-175E	175E					
A083B2DAR0-200E	200E					

Figure H

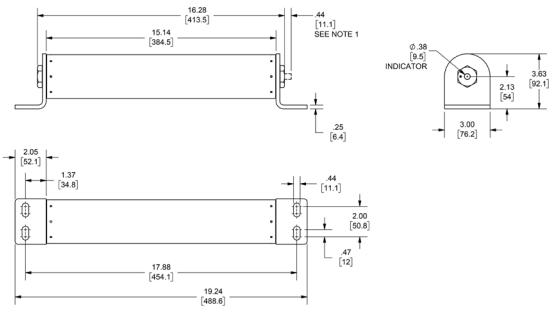

Figure I

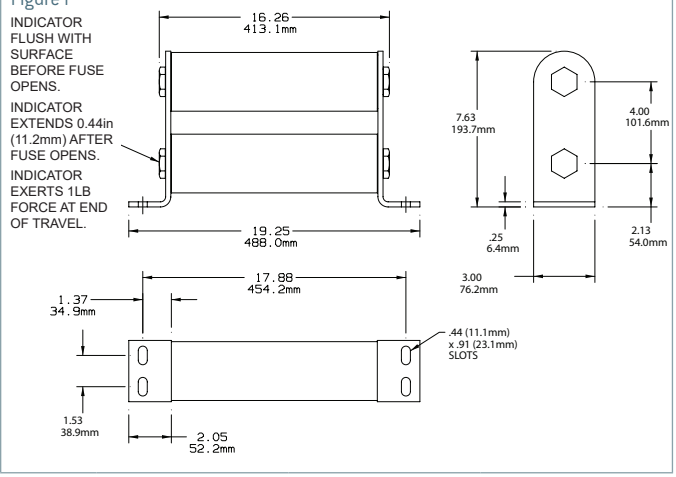

© 2025 Mersen. All rights reserved. Mersen reserves the right to change, update, or correct, without notice, any information contained in this datasheet.

15.5kV BOLT-IN FUSES:

15. 5kV E-Rated Amp-Trap Bolt-In Series
Suitable for use indoors or in an enclosure only

Catalog No.	Amp Rating	No. of Barrels	Indicating	Max Voltage	Max IR RMS Sym	Figure
A155B1D0R0-10E	10E	1	Yes	15.5kV	50kA	J
A155B1D0R0-15E	15E	1	Yes	15.5kV	50kA	J
A155B1D0R0-20E	20E	1	Yes	15.5kV	50kA	J
A155B1D0R0-25E	25E	1	Yes	15.5kV	50kA	J
A155B1D0R0-30E	30E	1	Yes	15.5kV	50kA	J
A155B1D0R0-40E	40E	1	Yes	15.5kV	50kA	J
A155B1D0R0-50E	50E	1	Yes	15.5kV	50kA	J
A155B1D0R0-65E	65E	1	Yes	15.5kV	50kA	K
A155B1D0R0-80E	80E	1	Yes	15.5kV	50kA	K
A155B1D0R0-100E	100E	1	Yes	15.5kV	50kA	K
A155B2D0R0-125E	125E	2	Yes	15.5kV	50kA	L
A155B2D0R0-150E	150E	2	Yes	15.5kV	50kA	L
A155B2D0R0-200E	200E	2	Yes	15.5kV	50kA	L
A155B3D0R0-250E	250E	3	Yes	15.5kV	50kA	M
A155B3D0R0-300E	300E	3	Yes	15.5kV	50kA	M

Figure J

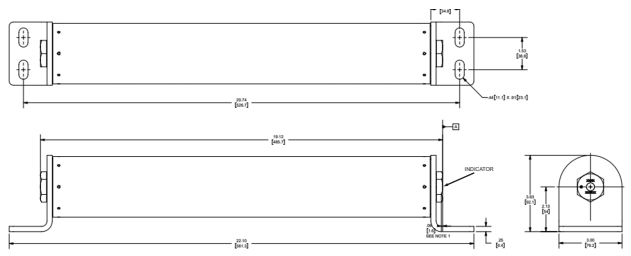

Figure K

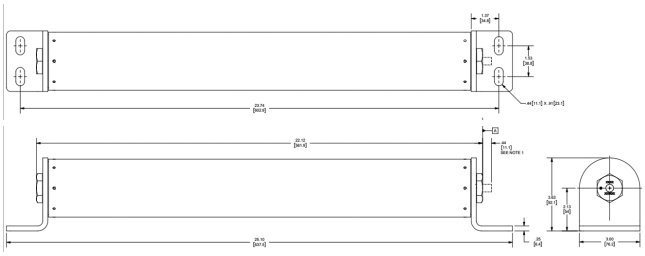

Figure L

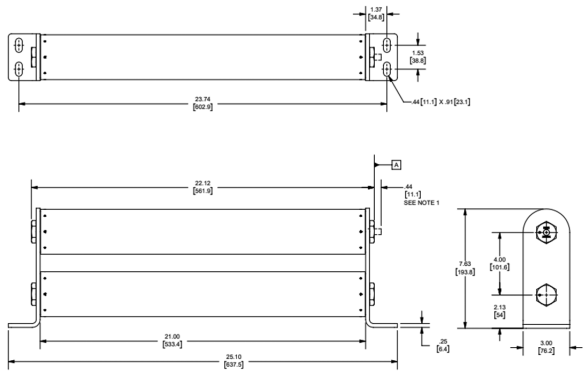

Figure M

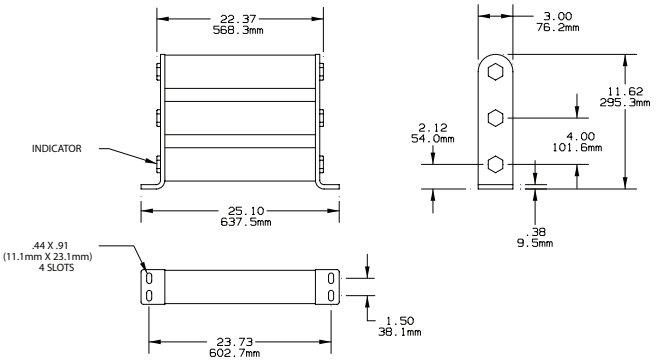

© 2025 Mersen. All rights reserved. Mersen reserves the right to change, update, or correct, without notice, any information contained in this datasheet.

15.5kV BOLT-IN FUSES:

15.5kV General Purpose fuses – 9F60 Series, EJO-1

Suitable for use indoors or outdoors

Catalog No.	Amp Rating	No. of Barrels	Indicating	Diameter Inches (mm)	Length Inches (mm)	Max Voltage	Max IR RMS Sym	Fig.	Fuse Support Indoor (EK-1)	Fuse Support Outdoor (EKO-1)	Fuse Disconnect Indoor (EK-3)	Fuse Disconnect Outdoor (EKO-3)
9F60XMH125	125A	4	Yes	3(76.2)	22.65" (575.3)	15.5 kV	50 kA	N	9F61GHL001	9FG1CHL009	N/A	N/A

15.5kV General Purpose fuses – 9F62 Series, EJO-1 – UL Listed

Suitable for use indoors or outdoors

Catalog No.	Amp Rating	No. of Barrels	Indicating	Max Voltage	Max IR RMS Sym	Figure	Fuse Support Indoor (EK-1)	Fuse Support Outdoor (EKO-1)
9F62KED300	300A	4	Yes	15.5 kV	50kA	N	9F61AHG001	9F61CHL009

Figure N

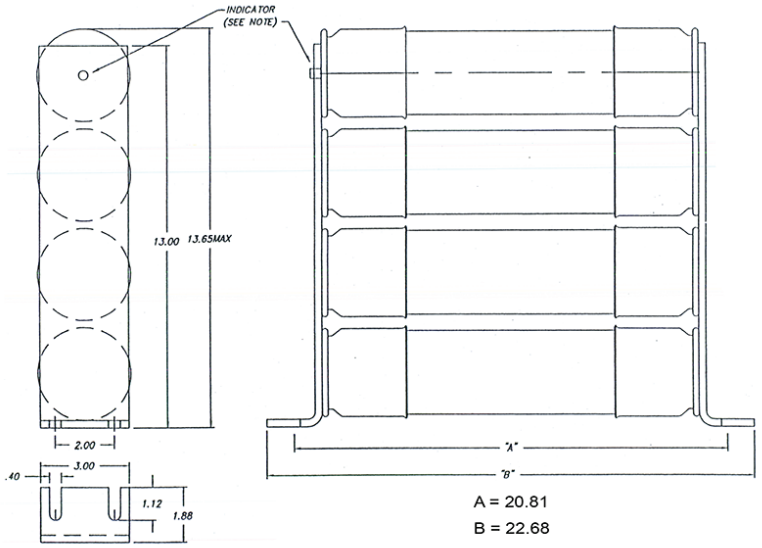

© 2025 Mersen. All rights reserved. Mersen reserves the right to change, update, or correct, without notice, any information contained in this datasheet.

Transformer Protection

Amp-Trap® CL-14 Series

MEDIUM VOLTAGE FUSES

5.5kV, 8.25kV, AND 15.5kV CLIP-LOCK MOUNTED FUSES



Mersen Amp-Trap fuses for the protection of transformers and distribution lines deliver overload and short circuit protection. These general purpose current-limiting fuses will melt at current that can be as low as 1.7 times the fuse current ratings up to its maximum interrupting rating. These fuses are designed to withstand the transformer magnetizing inrush current. They are single, double or triple barrels 3 inch diameter (size D) and mount in unique cam-locking clips for superior connections as well as easy installation and replacement.

FEATURES/BENEFITS:

- UL listed for compatibility with UL listed equipment.
- Clip-lock mounting for reliable high integrity connection into circuit.
- Current-limiting for superior equipment protection.
- Non-venting for silent operation.
- Metal embossed catalog number and manufacturing date for lasting identification.
- Blown-fuse indicator to give positive identification of open fuse.
    - 1 lb tripped force - 0.44 inch

HIGHLIGHTS:

- E-Rated
- UL listed

APPLICATIONS:

- Protection for 5.5kV to 15.5kV transformers or distribution systems.

Ratings:

Amp-Trap CL-14 Series

(Indoor or outdoors in a weatherproof enclosure)

A055C

- **Volts:** 5.5kV AC
- **Amps:** 10 to 600E
- **IR:** 63kA Sym

A083C:

- **Volts:** 8.25kV AC
- **Amps:** 60 to 200E
- **IR:** 70kA Sym

A155C

- **Volts:** 15.5kV AC
- **Amps:** 10 to 300E
- **IR:** 50kA Sym

APPROVALS:

- Some UL Listed to standard File E143362

See Fuse Blocks and Holders section for CL-14 Clip-Lock Clips

© 2025 Mersen. All rights reserved. Mersen reserves the right to change, update, or correct, without notice, any information contained in this datasheet.

5.5kV CLIP-LOCK MOUNTED FUSES:

5.5kV E-Rated Amp-Trap CL-14 Series

15.25" (388mm) Clip Centers (dimension E). Suitable for use indoors or in an enclosure only.

Catalog No.	Amp Rating	No. of Barrels	Indicating	Max Voltage	Max IR RMS Sym	Figure	Dimensions Inches (mm)			
							A	B	C	E
A055C1D0R0-10E	10E	1	Yes	5.5kV	63kA	A	16.81 (427)	16.12 (410)	0.44 (11.1) Tripped Force 1 lbs.	15.25 (388)
A055C1D0R0-15E	15E									
A055C1D0R0-20E	20E									
A055C1D0R0-25E	25E									
A055C1D0R0-30E	30E									
A055C1D0R0-40E	40E									
A055C1D0R0-50E	50E									
A055C1D0R0-65E	65E									
A055C1D0R0-80E	80E									
A055C1D0R0-100E	100E									
A055C1D0R0-125E	125E									
A055C1D0R0-150E	150E									

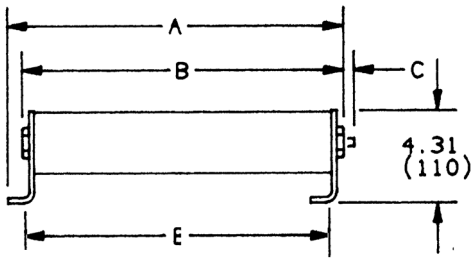

Figure A

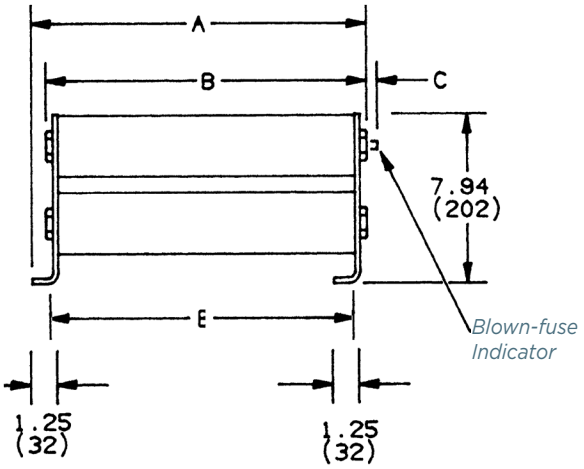

Figure B

5.5kV E-Rated Amp-Trap CL-14 Series

21.25" (540mm) Clip Centers (dimension E). Suitable for use indoors or in an enclosure only.

Catalog No.	Amp Rating	No. of Barrels	Indicating	Max Voltage	Max IR RMS Sym	Figure	Dimensions Inches (mm)			
							A	B	C	E
A055C1D0R0-200E	200E	1	Yes	5.5kV	63kA	A	22.81 (580)	22.12 (562)	0.44 (11.1) Tripped Force 1 lbs.	21.25 (540)
A055C1D0R0-250E	250E									
A055C1D0R0-300E	300E									
A055C1D0R0-400E	400E									
A055C2D0R0-450E	450E	2	Yes	5.5kV	63kA	B	22.81 (580)	22.12 (562)	0.44 (11.1) Tripped Force 1 lbs.	21.25 (540)
A055C2D0R0-500E	500E									
A055C2D0R0-600E	600E									

© 2025 Mersen. All rights reserved. Mersen reserves the right to change, update, or correct, without notice, any information contained in this datasheet.

8.25kV CLIP-LOCK MOUNTED FUSES:

8.25kV E-Rated Amp-Trap CL-14 Series

15.70" (399mm) and 15.39 (391mm) Clip Centers (dimension E). Suitable for use indoors or in an enclosure only.

Catalog No.	Amp Rating	No. of Barrels	Indicating	Max Voltage	Max IR RMS Sym	Figure	Dimensions Inches (mm)			
							A	B	C	E
A083C1D0R0-60E	60E	1	Yes	8.25kV	70kA	A	16.95 (431)	16.26 (413)	0.44 (11.1) Tripped Force 1 lbs.	15.39 (391)
A083C2D0R0-200E	200E	2	Yes	8.25kV	70kA	B	16.95 (431)	16.26 (413)	0.44 (11.1) Tripped Force 1 lbs.	15.39 (391)

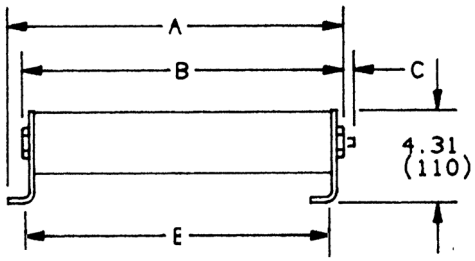

Figure A

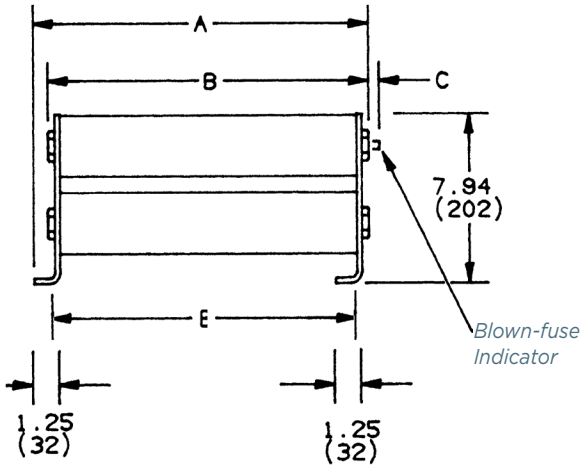

Figure B

© 2025 Mersen. All rights reserved. Mersen reserves the right to change, update, or correct, without notice, any information contained in this datasheet.

15.5kV CLIP-LOCK MOUNTED FUSES:

15.5kV E-Rated Amp-Trap CL-14 Series

18.25" (464mm) Clip Centers (dimension E). Suitable for use indoors or in an enclosure only.

Catalog No.	Amp Rating	No. of Barrels	Indicating	Max Voltage	Max IR RMS Sym	Figure	Dimensions Inches (mm) A	B	C	E
A155C1D0R0-10E	10E	1	Yes	15.5kV	50kA	A	19.81 (504)	19.12 (486)	0.44 (11.1) Tripped Force 1 lbs.	18.25 (464)
A155C1D0R0-15E	15E									
A155C1D0R0-20E	20E									
A155C1D0R0-25E	25E									
A155C1D0R0-30E	30E									
A155C1D0R0-40E	40E									
A155C1D0R0-50E	50E									

15.5kV E-Rated Amp-Trap CL-14 Series

21.25" (540mm) Clip Centers (dimension E). Suitable for use indoors or in an enclosure only.

Catalog No.	Amp Rating	No. of Barrels	Indicating	Max Voltage	Max IR RMS Sym	Figure	Dimensions Inches (mm) A	B	C	E
A155C1D0R0-65E	65E	1	Yes	15.5kV	50kA	A	22.81 (580)	22.12 (562)	0.44 (11.1) Tripped Force 1 lbs.	21.25 (540)
A155C1D0R0-80E	80E									
A155C1D0R0-100E	100E									
A155C2D0R0-125E	125E	2	Yes	15.5kV	50kA	B	22.81 (580)	22.12 (562)	0.44 (11.1) Tripped Force 1 lbs.	21.25 (540)
A155C2D0R0-150E	150E									
A155C2D0R0-200E	200E									
A155C3D0R0-150E	150E	3	Yes	15.5kV	50kA	C	22.81 (580)	22.12 (562)	0.44 (11.1) Tripped Force 1 lbs.	21.25 (540)
A155C3D0R0-200E	200E									
A155C3D0R0-250E	250E									
A155C3D0R0-300E	300E									

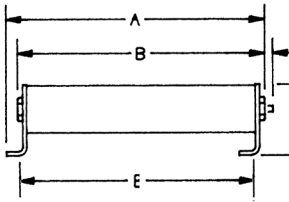

Figure A

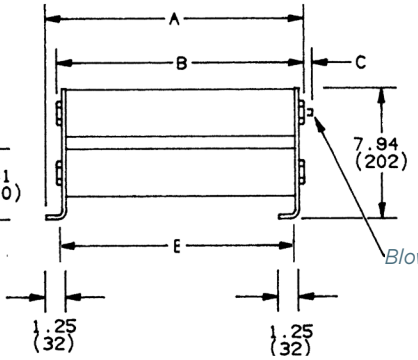

Figure B

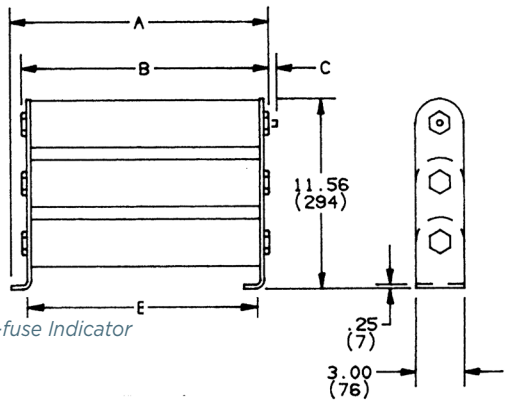

Figure C

© 2025 Mersen. All rights reserved. Mersen reserves the right to change, update, or correct, without notice, any information contained in this datasheet.

Motor Protection

Amp-Trap® and 9F60 Series

MEDIUM VOLTAGE FUSES

2.4kV, 2.54kV, 4.8kV, 5.08kV AND 7.2kV FERRULE MOUNTED FUSES



Mersen R-Rated fuses are current-limiting, high interrupting rating fuses intended for the short circuit protection of medium voltage motors and motor controllers. R-Rated fuses are back-up fuses that have a minimum interrupting rating, and must be coordinated with overload relays in combination motor starters. These fuses come with a 3 (size D) or 4 (size E) inch diameter barrels with ferrules and are mounted in spring reinforced clips. Used in and required for replacement in motor controllers by many major manufacturers.

FEATURES/BENEFITS:

- The Amp-Trap and 9F60 R-Rated fuses are UL Recognized.
- Ferrule mounting for standard clips and interchangeability with other brands of fuses.
- Current-limiting for superior equipment protection.
- Metal embossed catalog number and manufacturing date for lasting identification.
- Blown-fuse indicator to give positive identification of open fuse.
    - Amp-Trap, 3" Barrel: 1 lb tripped force - 0.44 inch
    - 9F60: 0.125 lb tripped force – 0.20 inch
- Many parts offered in non-indicating versions for use in Class 1, Div 2 environments.
- Hook-eye option featured on some models for non-load break isolation by hookstick.
    - A051F part numbers include welded hook-eye feature and are designed for use in Eaton Ampgard MCC, and direct replacement for 5ACLS series Eaton fuses.
    - Optional hook-eye is also available on A480 part numbers, factory installed.

Ratings:

Amp-Trap

A240R

- **Volts:** 2.4kVAC
- **Amps:** 1 to 36R
- **IR:** 65kA Sym

A480R

- **Volts:** 4.8kVAC
- **Amps:** 2 to 36R
- **IR:** 64-65kA

A051F

- **Volts:** 5.08kV
- **Amps:** 2 to 24R
- **IR:** 50kA Sym

A072F

- **Volts:** 7.2kVAC
- **Amps:** 2 to 24R
- **IR:** 65kA Sym

9F60 SERIES TYPE EJ-2

9F60

- **Volts:** 2.54kVAC, 5.08kVAC
- **Amps:** 2 to 36R
- **IR:** 50kA Sym

APPLICATIONS:

- Short circuit protection of medium voltage motors and motor controllers.

APPROVALS:

- Amp-Trap: UL File E93367
- 9F60: UL File E191980

© 2025 Mersen. All rights reserved. Mersen reserves the right to change, update, or correct, without notice, any information contained in this datasheet.

DEFINITIONS:

R-Rating: R-Rated fuses are back-up fuses that operate as follows (Per IEEE C37.42-2016): An R-Rated fuse will melt in the range of 15 to 35 seconds at a value of current equal to 100 times the "R" rating.

Back-up Current-Limiting Fuses: A back-up current-limiting fuse is a fuse that can interrupt any current between its rated minimum interrupting current and its maximum interrupting current. Back-up fuses are not designed or intended to open under overload conditions.

Continuous Ampere Rating at 40°C: The continuous amp rating defines the thermal capability of the fuse per IEEE C37.42-2016 and should not be the sole factor in fuse selection.

2.4kV FERRULE MOUNTED FUSES:

2.4kV R-Rated Amp-Trap Series

7.5" (191 mm) Clip Centers – Barrel diameter size D (3")

Catalog No.	Size	Continuous Amp rating at 40°C	Minimum Interrupting Rating RMS Amp	No of Barrels	Fig.	Indicating	Dimension L Inches (mm)	1 Phase interrupting rating	
								UL Component Recognition Max IR RMS Sym	Max Voltage Tested Max IR RMS Sym
A240R1R	1R	35	100	1	A	Yes	10.88 (276)	65kA at 2.6kV	65kA at 2.6kV
A240R2R	2R	70	170						
A240R3R	3R	100	250						
A240R4R	4R	130	340						
A240R5R	5R	150	420						
A240R6R	6R	170	500						
A240R9R	9R	200	760						
A240R12R	12R	230	1000						
A240R18R	18R	390	1500	2	B				
A240R24R	24R	450	2000						
A240R36R	36R**	650	2900	3	C				

*** Not recommended for use in fuse clips which grasp only one barrel.*

2.4kV / 2.54kV Ferrule mounted fuses:

Indicator Flush with Surface

2 Lb. Force (Tripped)

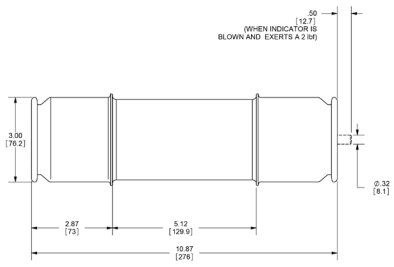

Figure A

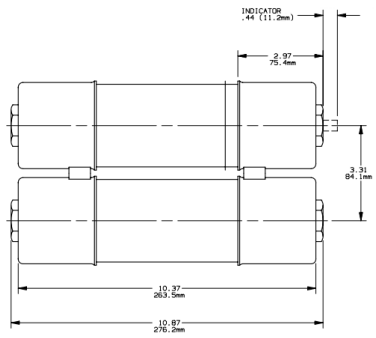

Figure B

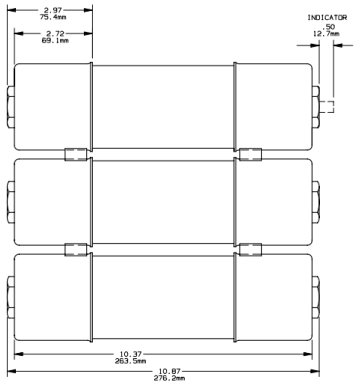

Figure C

© 2025 Mersen. All rights reserved. Mersen reserves the right to change, update, or correct, without notice, any information contained in this datasheet.

2.4kV AND 5.08kV FERRULE MOUNTED FUSES:

2.4kV R-Rated 9F60 EJ-2 Series

7" (179 mm) Clip Centers – Barrel diameter size D (3")

Catalog No.	Size	Continuous Amp rating at 40°C	Minimum Interrupting Rating RMS Amp	No of Barrels	Fig.	Indicating	Dimension L Inches (mm)	1 Phase interrupting rating	
								UL Component Recognition Max IR RMS Sym	Max Voltage Tested Max IR RMS Sym
9F60LCB502	2R	70	195	1	D	Yes	10.88 276)	50kA at 2.54kV	50kA at 2.54kV
9F60LCB503	3R	100	270						
9F60LCB504	4R	130	370						
9F60LCB506	6R	170	580						
9F60LCB509	9R	200	820						
9F60LCB512	12X	230	1150						
9F60MCB518	18R	390	1800	2	E				
9F60MCB524	24R	450	2400						
9F60LCL302	2R	70	195	1	D	No	10.88 (276)	50kA at 2.54kV	50kA at 2.54kV
9F60LCL303	3R	100	270						
9F60LCL304	4R	130	370						
9F60LCL306	6R	170	580						
9F60LCL309	9R	200	820						
9F60LCL312	12X	230	1150						
9F60MCL318	18R	390	1800	2	E				
9F60MCL324	24R	450	2400						

5.08kV R-Rated 9F60 EJ-2 Series

12" (305 mm) Clip Centers – Barrel diameter size D (3")

Catalog No.	Size	Continuous Amp rating at 40°C	Minimum Interrupting Rating RMS Amp	No of Barrels	Fig.	Indicating	Dimension L Inches (mm)	1 Phase interrupting rating	
								UL Component Recognition Max IR RMS Sym	Max Voltage Tested Max IR RMS Sym
9F60LJD502	2R	70	195	1	D	Yes	15.97 (406)	50kA at 5.08kV	50kA at 5.08kV
9F60LJD503	3R	100	270						
9F60LJD504	4R	130	370						
9F60LJD506	6R	170	580						
9F60LJD509	9R	200	820						
9F60LJD512	12X	230	1150						
9F60MJD518	18R	390	1800	2	E				
9F60MJD524	24R	450	2400						
9F60LJN302	2R	70	195	1	D	No	15.97 (406)	50kA at 5.08kV	50kA at 5.08kV
9F60LJN303	3R	100	270						
9F60LJN304	4R	130	370						
9F60LJN306	6R	170	580						
9F60LJN309	9R	200	820						
9F60LJN312	12X	230	1150						
9F60MJN318	18R	390	1800	2	E				
9F60MJN324	24R	450	2400						

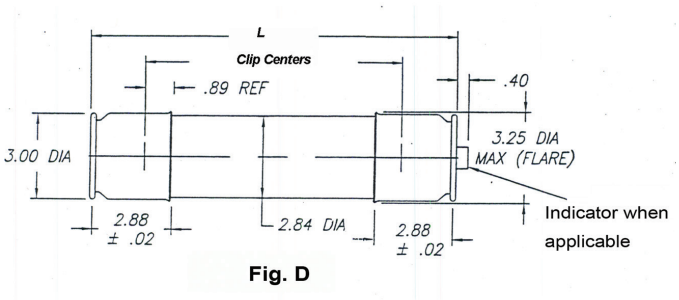

Fig. D

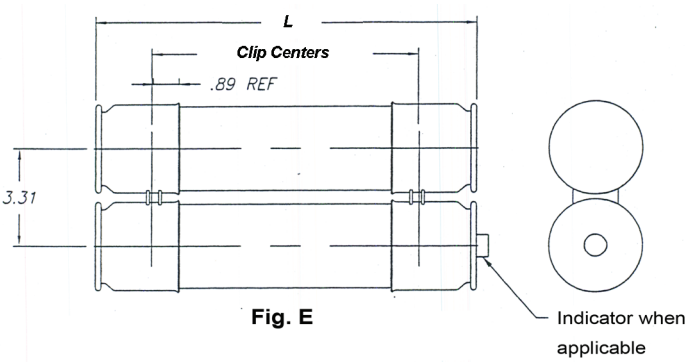

Fig. E

© 2025 Mersen. All rights reserved. Mersen reserves the right to change, update, or correct, without notice, any information contained in this datasheet.

4.8kV / 5.08kV FERRULE MOUNTED FUSES:

4.8kV R-Rated Amp-Trap Series

12.5" (317 mm) Clip Centers – Barrel diameter size D (3")

Catalog No.	Size	Continuous Amp rating at 40°C	Minimum Interrupting Rating RMS Amp	No of Barrels	Fig.	Indicating	Dimension L Inches (mm)	1 Phase interrupting rating	
								UL Component Recognition Max IR RMS Sym	Max Voltage Tested Max IR RMS Sym
A480R2R-1	2R	70	190	1	F	Yes	15.88 (403)	65kA at 5.5kV	65kA at 5.5kV
A480R3R-1	3R	100	225						
A480R4R-1	4R	130	330						
A480R5R-1	5R	150	400						
A480R6R-1	6R	170	500						
A480R9R-1	9R	200	740						
A480R12R-1	12R	230	955						
A480R18R-1	18R	390	1440	2	G			64kA at 5.5kV	64kA at 5.5kV
A480R24R-1	24R	450	1910						
A480R36R-1	36R**	650	2810	3	H				

*** Not recommended for use in fuse clips which grasp only one barrel.*

4.8kV R-Rated Amp-Trap Series with Hookeye

12.75" (324 mm) Clip Centers – Barrel diameter size D (3")

Catalog No.	Size	Continuous Amp rating at 40°C	Minimum Interrupting Rating RMS Amp	No of Barrels	Fig.	Indicating	Dimension L Inches (mm)	1 Phase interrupting rating	
								UL Component Recognition Max IR RMS Sym	Max Voltage Tested Max IR RMS Sym
A480R2R-1HE	2R	70	190	1	F-HE	Yes	16.13 (410)	50kA at 5.08kV	63kA at 5.5kV
A480R3R-1HE	3R	100	225						
A480R4R-1HE	4R	130	330						
A480R5R-1HE	5R	150	400						
A480R6R-1HE	6R	170	500						
A480R9R-1HE	9R	200	740						
A480R12R-1HE	12R	230	955						
A480R18R-1HE	18R	390	1440	2	G				
A480R24R-1HE	24R	450	1910						

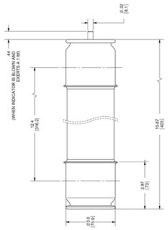

Figure F

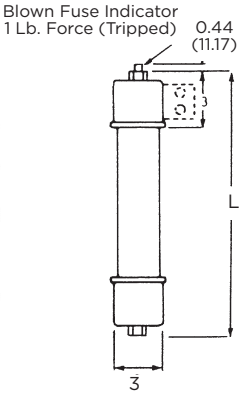

Figure F-HE

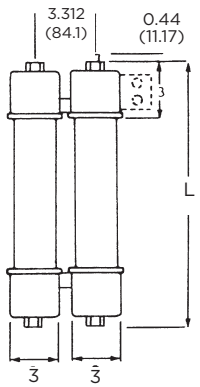

Figure G

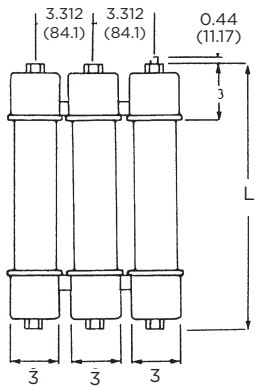

Figure H

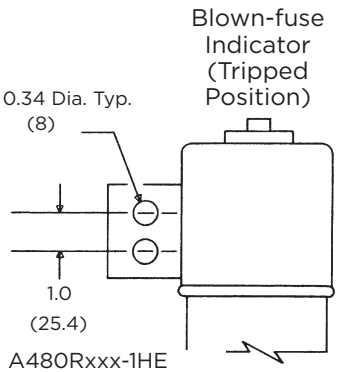

A480Rxxx-1HE models

© 2025 Mersen. All rights reserved. Mersen reserves the right to change, update, or correct, without notice, any information contained in this datasheet.

4.8kV / 5.08kV FERRULE MOUNTED FUSES:

5.08kV R-Rated Amp-Trap Ferrule Mount w/ Hookeye, for use in Ampgard Switchgear

Catalog No.	Size	Continuous Amp rating at 40°C	Rated Minimum Interrupting Current	No of Barrels	Fig.	Indicating	Dimension L Inches (mm)	UL Component Recognition Max IR RMS Sym	Max Voltage Tested Max IR RMS Sym
A051F1DHR0-2R	2R	70	220	1	I	Yes**	15.88 (403.2)	50kA @5.08kV	50kA @5.08kV
A051F1DHR0-3R	3R	100	270						
A051F1DHR0-4R	4R	130	360						
A051F1DHR0-5R	5R	150	450						
A051F1DHR0-6R	6R	170	600						
A051F1DHR0-9R	9R	200	900						
A051F1DHR0-12R	12R	230	1200						
A051F2DHR0-18R	18R	390	1500	2	J				
A051F2DHR0-24R	24R	450	2200						

*** All part numbers available without indication by substituting "DHR0" w/ "DHRN". Example: A051F1DHRN-24R*

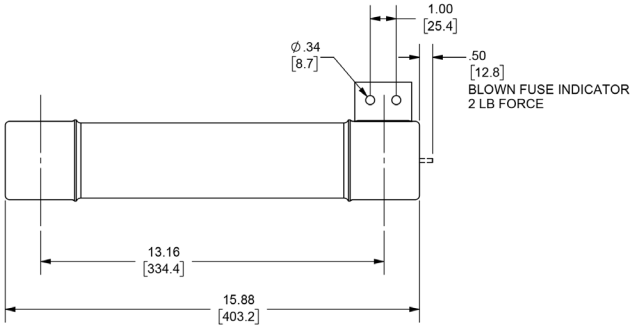

Figure I

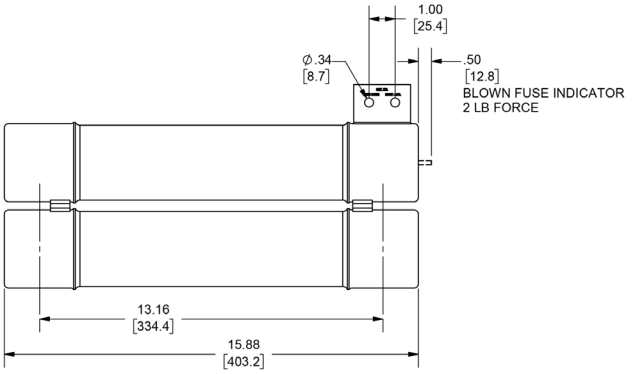

Figure J

© 2025 Mersen. All rights reserved. Mersen reserves the right to change, update, or correct, without notice, any information contained in this datasheet.

7.2kV FERRULE MOUNTED FUSES:

7.2kV R-Rated Amp-Trap Series

12.5" (317 mm) Clip Centers – Barrel diameter size D (3")

Catalog No.	Size	Continuous Amp rating at 40°C	Minimum Interrupting Rating RMS Amp	No of Barrels	Fig.	Indicating	Dimension L Inches (mm)	1 Phase interrupting rating	
								UL Component Recognition Max IR RMS Sym	Max Voltage Tested Max IR RMS Sym
A072F1D0R0-2R	2R	70	190	1	L	Yes	15.88 (403)	65kA at 7.2kV	65kA at 7.7kV
A072F1D0R0-3R	3R	100	225						
A072F1D0R0-4R	4R	130	330						
A072F1D0R0-5R	5R	150	400						
A072F1D0R0-6R	6R	170	500						
A072F1D0R0-9R	9R	200	740						
A072F1D0R0-12R	12R	230	955						
A072F2D0R0-18R	18R	390	1440	2	M				
A072F2D0R0-24R	24R	450	1910						

Indicator Flush
with Surface
2 Lb. Force (Tripped)

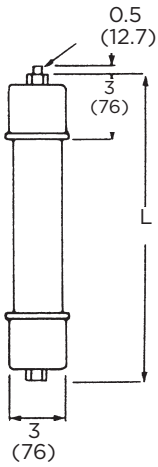

Figure L

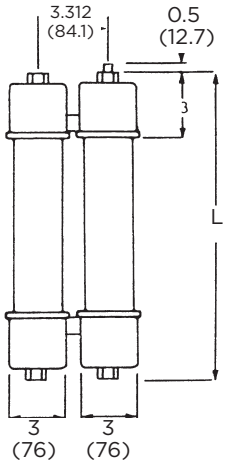

Figure M

© 2025 Mersen. All rights reserved. Mersen reserves the right to change, update, or correct, without notice, any information contained in this datasheet.

Motor Protection

Amp-Trap® Bolt-In Series

MEDIUM VOLTAGE FUSES

5.08kV, 7.2kV AND 15.5kV
BOLT-IN FUSES



Mersen R-Rated fuses are current-limiting, high interrupting rating fuses intended for the short circuit protection of medium voltage motors and motor control centers (MCC). R-Rated fuses are back-up fuses that have a minimum interrupting rating, and must be coordinated with overload relays in MCCs. These fuses are single, double, triple or quadruple barrels 3 inches diameter with end mounts designed for bolting directly to equipment bus or terminal pads. Used in and requested for replacement in MCCs from many manufacturers.

FEATURES/BENEFITS:

- UL Recognized.
- Bolt-in mounting for direct connection to bus or terminals.
- Current-limiting for superior equipment protection.
- Metal embossed catalog number and manufacturing date for lasting identification.
- Blown-fuse indicator to give positive identification of open fuse:
    - Amp-Trap, 3" Barrel: 1 lb tripped force - 0.44 inch (0.38 inch for -DHR0 part numbers)
    - Mebane Fuses (9F60LXD/MXD parts): 1.8 lbs tripped force - 1 inch

Ratings:

Amp-Trap

A051B

- **Volts:** 5.08kV AC
- **Amps:** 2 to 38R
- **IR:** 50kA Sym, 65kA Sym

A072B

- **Volts:** 7.2kV AC
- **Amps:** 2 to 24R, 19R to 57X
- **IR:** 50kA Sym, 65kA Sym

A155B

- **Volts:** 15.5kV AC
- **Amps:** 9 to 38X
- **IR:** 50kA Sym

9F60 Series Type EJ-2

- **Volts:** 5.08kV
- **Amps:** 2 to 24R
- **IR:** 50kA Sym

APPLICATIONS:

- Short circuit protection of medium voltage motors and motor controllers.
- Bolt-in equipment for secure mechanical connection in blast-proof equipment
- Many parts offered in non-indicating versions for use in Class 1, Div 2 locations

APPROVALS:

- UL Recognized File E93367 and File E191980

© 2025 Mersen. All rights reserved. Mersen reserves the right to change, update, or correct, without notice, any information contained in this datasheet.

DEFINITIONS:

R-Rating: R-Rated fuses are back-up fuses that operate as follows (Per IEEE C37.42-2016): An R-Rated fuse will melt in the range of 15 to 35 seconds at a value of current equal to 100 times the "R" rating.

Back-up Current-Limiting Fuses: A back-up current-limiting fuse is a fuse that can interrupt any current between its rated minimum interrupting current and its maximum interrupting current. Back-up fuses are not designed or intended to open under overload conditions.

Continuous Ampere Rating at 40°C: The continuous amp rating defines the thermal capability of the fuse per IEEE C37.42-2016 and should not be the sole factor in fuse selection.

5.08kV BOLT-IN FUSES:

5.08kV R-Rated Amp-Trap Bolt-In Series

Catalog No.	Size	Continuous Amp rating at 40°C	Minimum Interrupting Rating RMS Amp	No. of Barrels	Figure	Indicating	1 Phase interrupting rating	
							UL Component Recognition Max IR RMS Sym	Max Voltage Tested Max IR RMS Sym
A051B1DARO-2R	2R	70	190	1	A	Yes	65kA at 5.08kV	65kA at 5.5kV
A051B1DARO-3R	3R	100	225					
A051B1DARO-4R	4R	130	330					
A051B1DARO-6R	6R	170	500					
A051B1DARO-9R	9R	200	740					
A051B1DARO-12R	12R	230	955					
A051B2DARO-18R	18R	390	1440	2	B	Yes		
A051B2DARO-24R	24R	450	1910					
A051B2DARO-32R	32R	600	2500					
A051B2DARO-38R	38R	700	3100					
A051B3DARO-48X	48X	750	3600	3	C	Yes	50kA at 5.08kV	50kA at 5.2kV
A051B3DARO-57X	57X	900	4500					

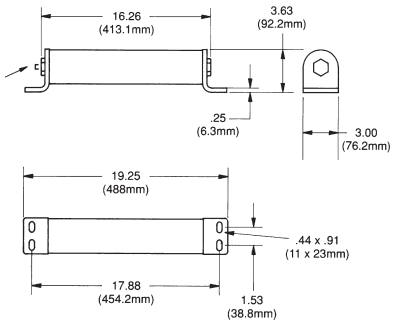

Figure A

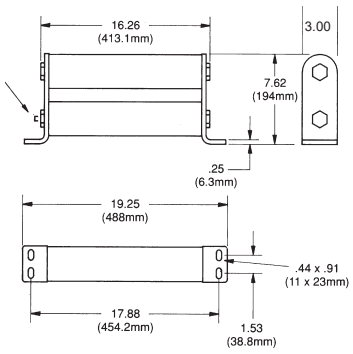

Figure B

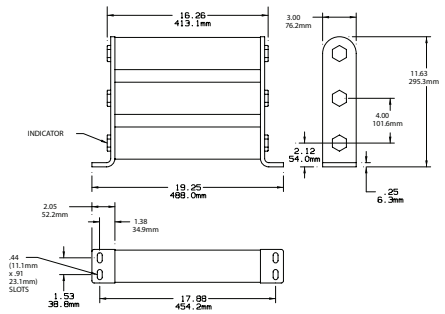

Figure C

© 2025 Mersen. All rights reserved. Mersen reserves the right to change, update, or correct, without notice, any information contained in this datasheet.

5.08kV BOLT-IN FUSES:

5.08kV R-Rated 9F60, EJ-2 Bolt-In Series, for use in Mebane Style Switchgear

Catalog No.	Size	Continuous Amp rating at 40°C	Rated Minimum Interrupting Current	No. of Barrels	Figure	Indicating	Dimension L Inches/ (mm)	UL Component Recognition Max IR RMS Sym	Max Voltage Tested Max IR RMS Sym
9F60LXD702	2R	70	195	1	D	Yes		50kA at 5.08kV	50kA at 5.08kV
9F60LXD703	3R	100	270						
9F60LXD704	4R	130	370						
9F60LXD706	6R	170	580						
9F60LXD709	9R	200	820						
9F60LXD712	12X	230	1150						
9F60MXD718	18R	390	1800	2	E				
9F60MXD724	24R	450	2400						

5.08kV R-Rated 9F60, EJ-2 Bolt-In Series, for use in Mebane Style Switchgear - Alternate Bolt Configuration

Catalog No.	Size	Continuous Amp rating at 40°C	Rated Minimum Interrupting Current	No. of Barrels	Figure	Indicating	Dimension L Inches/ (mm)	UL Component Recognition Max IR RMS Sym	Max Voltage Tested Max IR RMS Sym
9F60LXD402	2R	70	195	1	F	Yes		50kA at 5.08kV	50kA at 5.08kV
9F60LXD403	3R	100	270						
9F60LXD404	4R	130	370						
9F60LXD406	6R	170	580						
9F60LXD409	9R	200	820						
9F60LXD412	12X	230	1150						
9F60MXD418	18R	390	1800	2	G				
9F60MXD424	24R	450	2400						

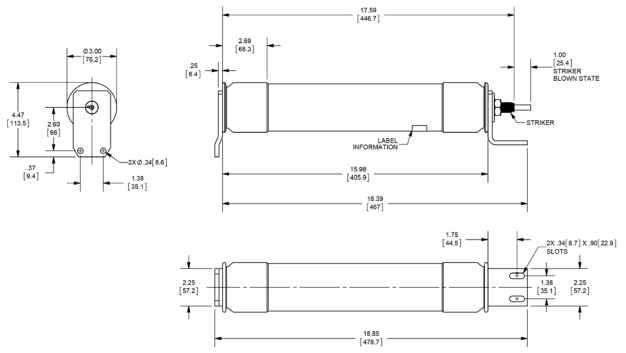

Figure D

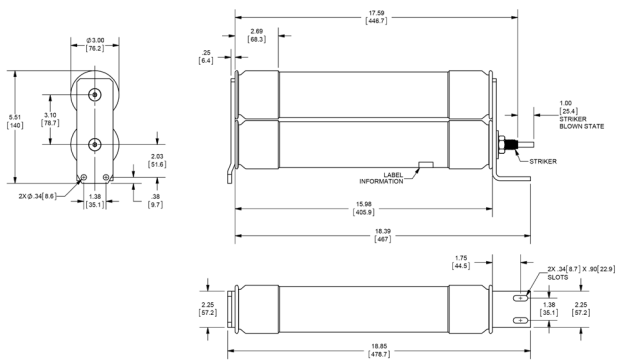

Figure E

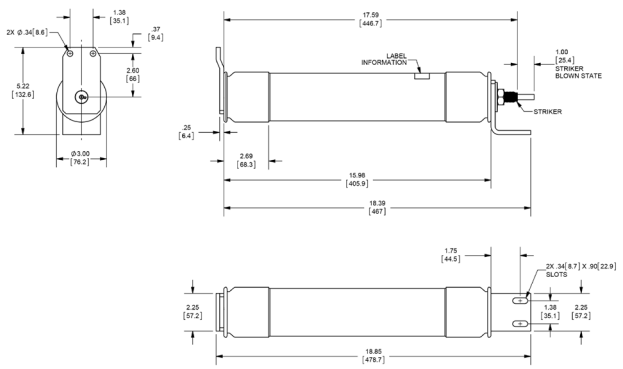

Figure F

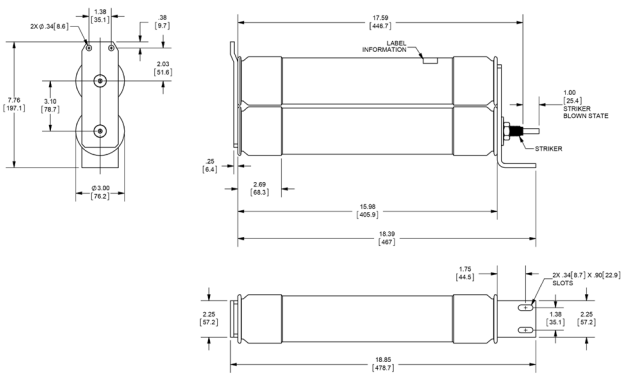

Figure G

© 2025 Mersen. All rights reserved. Mersen reserves the right to change, update, or correct, without notice, any information contained in this datasheet.

5.08kV BOLT-IN FUSES:

5.08kV R-Rated Amp-Trap Bolt-In Series, for use in Ampgard Switchgear

Catalog No.	Size	Continuous Amp rating at 40°C	Rated Minimum Interrupting Current	No. of Barrels	Figure	Indicating	Dimension L Inches/ (mm)	UL Component Recognition Max IR RMS Sym	Max Voltage Tested Max IR RMS Sym
A051B1DHR0-2R	2R	70	220	1	H	Yes**	15.88 (403.2)	50kA @5.08kV	50kA @5.08kV
A051B1DHR0-3R	3R	100	270						
A051B1DHR0-4R	4R	130	360						
A051B1DHR0-5R	5R	150	450						
A051B1DHR0-6R	6R	170	600						
A051B1DHR0-9R	9R	200	900						
A051B1DHR0-12R	12R	230	1200						
A051B2DHR0-18R	18R	390	1500	2	I				
A051B2DHR0-24R	24R	450	2200						

*** All part numbers available without indication by substituting "DHR0" w/ "DHRN". Example: A051B1DHRN-24R*

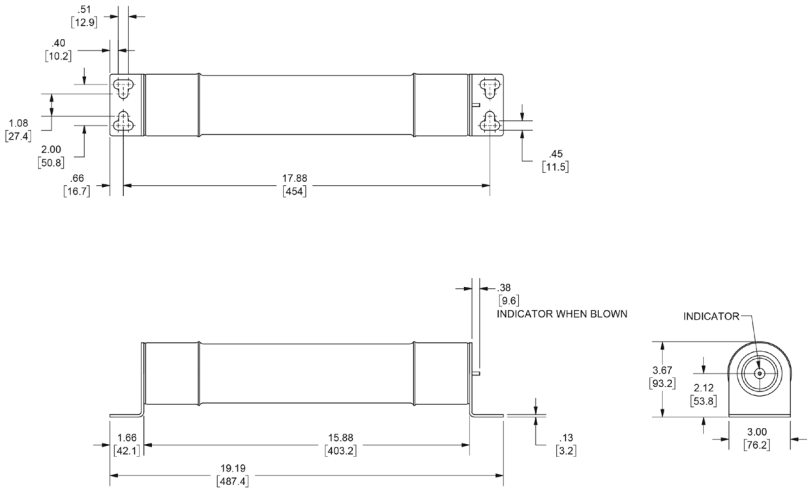

Figure H

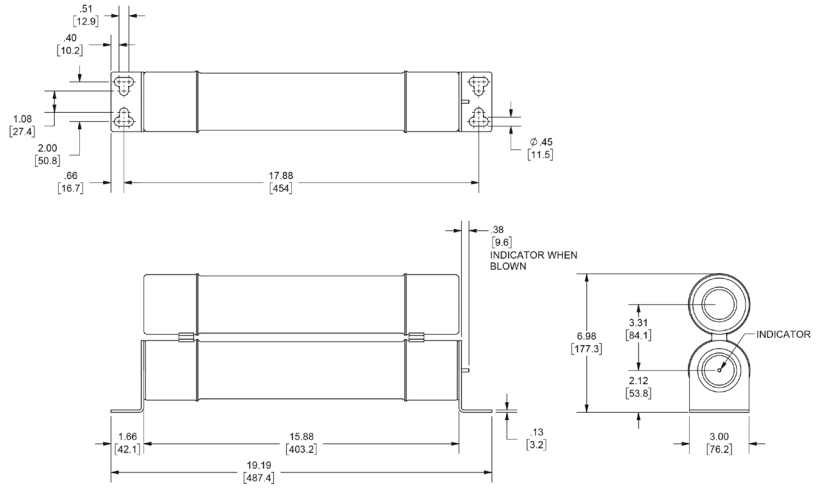

Figure I

© 2025 Mersen. All rights reserved. Mersen reserves the right to change, update, or correct, without notice, any information contained in this datasheet.

7.2kV BOLT-IN FUSES:

7.2kV R-Rated Amp-Trap Bolt-In Series

Catalog No.	Size	Continuous Amp rating at 40°C	Minimum Interrupting Rating RMS Amp	No. of Barrels	Figure	Indicating	1 Phase interrupting rating	
							UL Component Recognition Max IR RMS Sym	Max Voltage Tested Max IR RMS Sym
A072B1DAR0-2R	2R	70	190	1	J	Yes	65kA at 7.2kV	65kA at 7.7kV
A072B1DAR0-3R	3R	100	225					
A072B1DAR0-4R	4R	130	330					
A072B1DAR0-5R	5R	150	400					
A072B1DAR0-6R	6R	170	500					
A072B1DAR0-9R	9R	200	740					
A072B1DAR0-12R	12R	230	955					
A072B2DAR0-18R	18R	390	1440	2	K			
A072B2DAR0-24R	24R	450	1910					
A072B1D0R0-19R	19R	300	1560	1	L	Yes	65kA at 7.2kV	65kA at 7.66kV
A072B2D0R0-32R	32R	540	3070	2	M			65kA at 7.66kV
A072B2D0R0-38R	38R	600	3480					
A072B3DBR0-48X	48X	750	4360	3	N			65kA at 7.66kV
A072B3DBR0-57X	57X	900	5000	3	N			65kA at 7.2kV

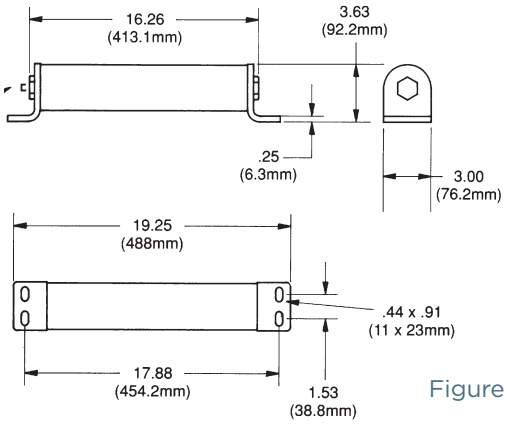

Figure J

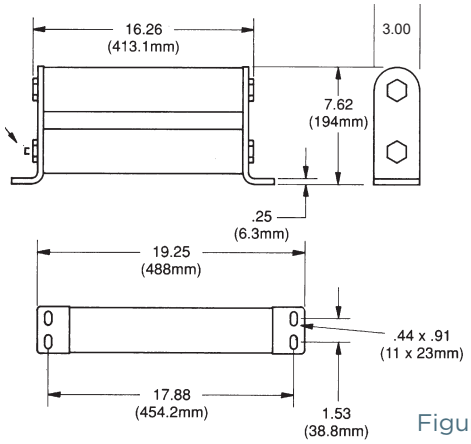

Figure K

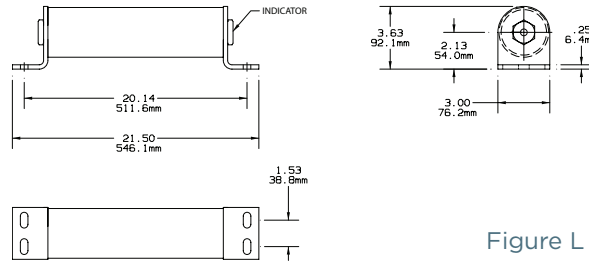

Figure L

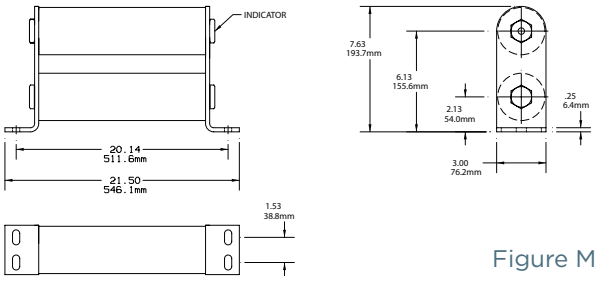

Figure M

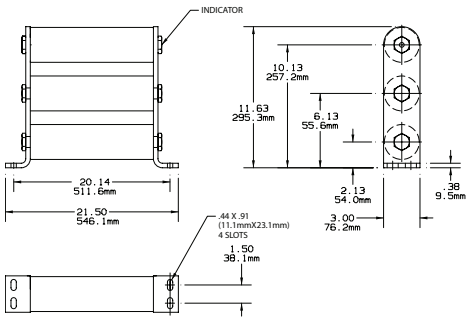

Figure N

© 2025 Mersen. All rights reserved. Mersen reserves the right to change, update, or correct, without notice, any information contained in this datasheet.

15.5kV BOLT-IN FUSES:

15.5kV R-Rated Amp-Trap Bolt-In Series

Catalog No.	Size	Continuous Amp rating at 40°C	Minimum Interrupting Rating RMS Amp	No. of Barrels	Figure	Indicating	1 Phase interrupting rating	
							UL Component Recognition Max IR RMS Sym	Max Voltage Tested Max IR RMS Sym
A155B2D0R0-9R	9R	200	888	2	O	Yes	50 kA at 15.5kV	50 kA at 15.5kV
A155B2D0R0-12R	12R	230	1200					
A155B3D0R0-18X	18X	390	1900	3	P			
A155B3D0R0-24X	24X	450	2633					
A155B4D0R0-32X	32X	600	3510	4	Q			
A155B4D0R0-38X	38X	700	4000					

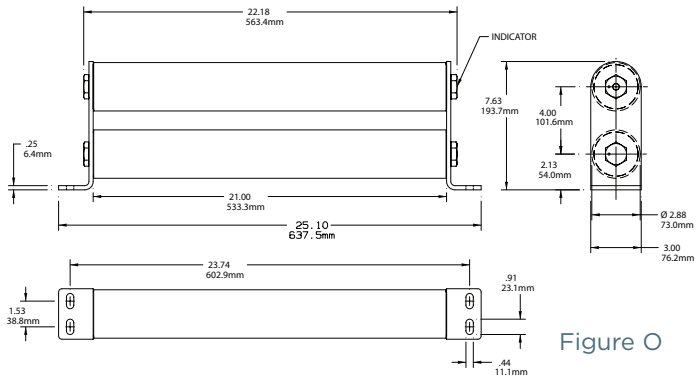

Figure O

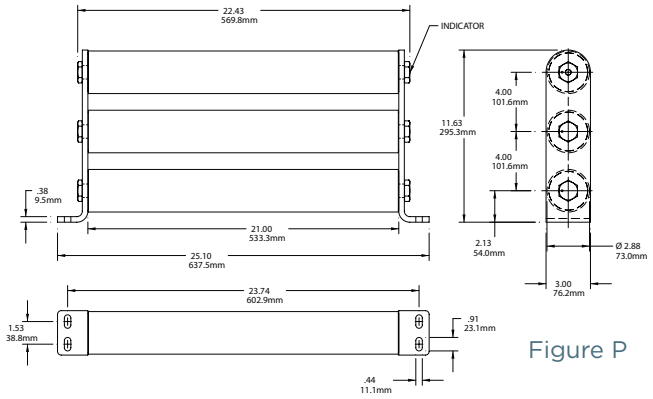

Figure P

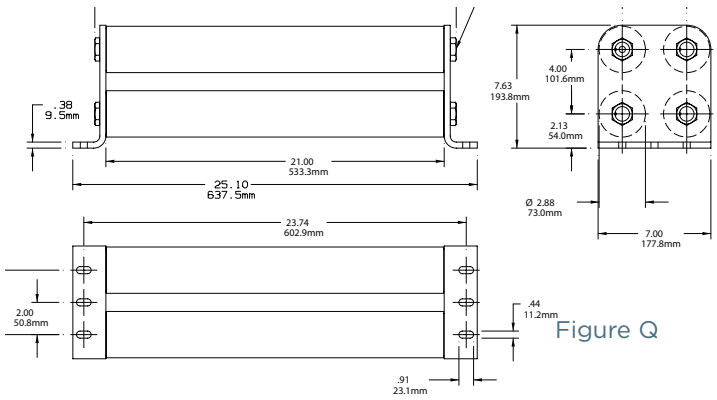

Figure Q

© 2025 Mersen. All rights reserved. Mersen reserves the right to change, update, or correct, without notice, any information contained in this datasheet.

Motor Protection

Amp-Trap® DIN-Style Fuses

MEDIUM VOLTAGE FUSES

R-RATED IEC DIN STYLE MV FUSES



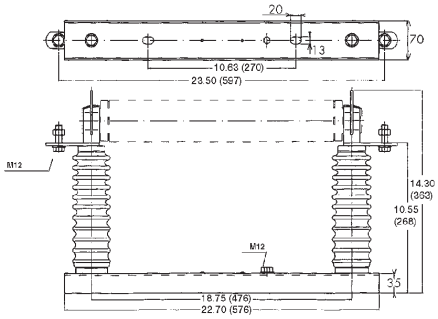

Amp-Trap® R-Rated DIN style fuses are current-limiting, high interrupting rating fuses, intended for the short circuit protection of medium voltage motors and motor controllers. This product range offers North American R-Rated performance in the IEC 282-1 DIN mounting configuration of 442mm. R-Rated fuses are applied as back up fuses that have a minimum interrupting rating, and must be coordinated with overload relays in combination motor starters. Amp-Trap R-Rated, DIN type fuses are offered in voltage ratings of 3.3kV, 5.5kV and 7.2kV in ratings from 2R to 19R. All fuses within this product group are UL component recognized.

DEFINITIONS:

R-Rating: R-Rated fuses are back-up fuses that operate as follows (Per IEEE C37.42-2016): An R-Rated fuse will melt in the range of 15 to 35 seconds at a value of current equal to 100 times the “R” rating.

Back-up Current-Limiting Fuses: A back-up current-limiting fuse is a fuse that can interrupt any current between its rated minimum interrupting current and its maximum interrupting current. Back-up fuses are not designed or intended to open under overload conditions.

Continuous Ampere Rating at 40°C: The continuous amp rating defines the thermal capability of the fuse per IEEE C37.42-2016 and should not be the sole factor in fuse selection.

Spring-Reinforced Clip MR45 & Spring Ref.# L096472

Fuse-Holder: SI 24/442 Ref # K209424 In compliance with IEC 282-1, DIN standard 43625. ** Note: Ratings above 19R may be achieved by paralleling fuses. Please consult factory for details.*

RATINGS:

A033D1

- **Volts:** 3300V AC
- **Amps:** 2 to 19R*
- **IR:** 65kA Sym

A055D1

- **Volts:** 5500V AC
- **Amps:** 2 to 19R*
- **IR:** 65kA Sym

A072D1

- **Volts:** 7200V AC
- **Amps:** 2 to19R*
- **IR:** 65kA Sym

FEATURES/BENEFITS:

- Clip mount DIN 45: R-Rated fuses with North American ANSI characteristics in a standard DIN 442mm size.
- Current-limiting for superior equipment protection
- Blown fuse indicator provides positive identification of open fuse. 4.5lb tripping force - 1.0”.

HIGHLIGHTS:

- R-Rated
- UL recognized

APPLICATIONS:

- Short circuit protection of medium voltage motors and motor controllers.

APPROVALS:

- UL recognized component File E93367

© 2025 Mersen. All rights reserved. Mersen reserves the right to change, update, or correct, without notice, any information contained in this datasheet.

Fig.	Catalog Number	Size	Continuous Amp Rating 55˚C**	Continuous Amp Rating 40˚C**	Minimum Interrupting Rating RMS Rating	1 Phase Interrupting Rating Maximum Tested	
						RMS Asym	RMS Sym
3.3kv Max. DIN IEC Style 442 mm							
A	A033D1DSR0-2R	2R	63	70	190	100kA @ 3300V	65kA @ 3300V
A	A033D1DSR0-3R	3R	90	100	225		
A	A033D1DSR0-4R	4R	115	130	225		
A	A033D1DSR0-5R	5R	135	150	400		
A	A033D1DSR0-6R	6R	150	170	540		
A	A033D1DSR0-9R	9R	180	200	780		
A	A033D1DSR0-12R	12R	210	230	955		
A	A033D1DSR0-13R	13R*	230	260	1050		
A	A033D1DSR0-16R	16R*	270	300	1200		
A	A033D1DSR0-19R	19R*	280	310	1280		
5.5kV Max. DIN IEC Style 442 mm							
A	A055D1DSR0-2R	2R	63	70	190	100kA @ 5500V	65kA @ 5500V
A	A055D1DSR0-3R	3R	90	100	225		
A	A055D1DSR0-4R	4R	115	130	225		
A	A055D1DSR0-5R	5R	135	150	400		
A	A055D1DSR0-6R	6R	150	170	540		
A	A055D1DSR0-9R	9R	180	200	780		
A	A055D1DSR0-12R	12R	210	230	955		
A	A055D1DSR0-13R	13R*	230	260	1050		
A	A055D1DSR0-16R	16R*	270	300	1200		
A	A055D1DSR0-19R	19R*	280	310	1280		
7.2kV Max. DIN IEC Style 442 mm							
A	A072D1DSR0-2R	2R	63	70	190	100kA @ 7200V	65kA @ 7200V
A	A072D1DSR0-3R	3R	90	100	225		
A	A072D1DSR0-4R	4R	115	130	400		
A	A072D1DSR0-5R	5R	135	150	540		
A	A072D1DSR0-6R	6R	150	170	550		
A	A072D1DSR0-9R	9R	180	200	780		
A	A072D1DSR0-12R	12R	210	230	955		
A	A072D1DSR0-13R	13R*	230	260	1050		
A	A072D1DSR0-16R	16R*	270	300	1200		
A	A072D1DSR0-19R	19R*	280	310	1280		

** 13R, 16R and 19R are not standard ratings defined in IEEE C37.42.*
*** This rating defines the thermal capability of the fuse per IEEE C37.42 and should not be the sole factor in fuse selection.*

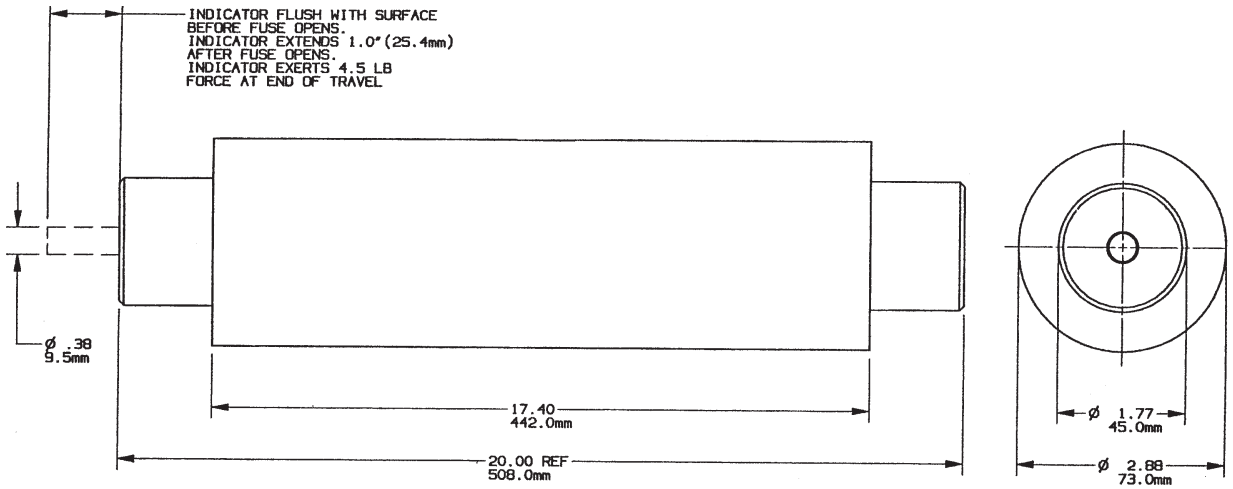

Figure A

© 2025 Mersen. All rights reserved. Mersen reserves the right to change, update, or correct, without notice, any information contained in this datasheet.

Potential Transformer

Amp-Trap® and 9F60 Series PT Fuses

MEDIUM VOLTAGE FUSES

0.625kV – 15.5kV FERRULE MOUNTED FUSES



Mersen PT fuses are current-limiting fuses with high interrupting rating, used for the primary winding protection of potential transformer. They are small dimension ferrule type fuses and mount in standard clips. Current ratings are from 0.25A to 10A.

FEATURES/BENEFITS:

- Ferrule mounting for standard clips and interchangeability with other brands of fuses.
- Current-limiting for superior equipment protection.
- Non-venting for silent operation.
- Metal embossed catalog number and manufacturing date for lasting identification.
- Blown-fuse indicator to give positive identification of open fuse fuse is available on the 9F60 series.

APPLICATIONS:

- Primary protection for potential transformers (PT) or control power transformers (CPT).

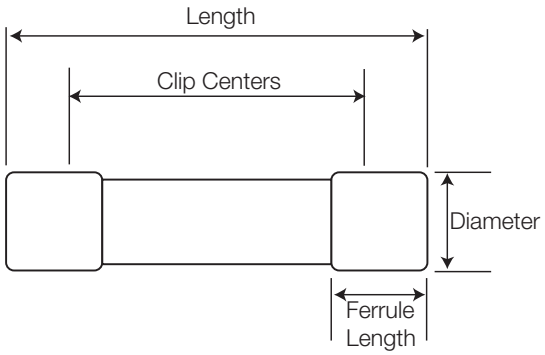

RATINGS:

Amp-Trap

A240T

- **Volts:** 2.4kVAC
- **Amps:** 0.5 to 5A
- **IR:** 50kA Sym

A480T

- **Volts:** 4.8kVAC
- **Amps:** 0.5 to 5A
- **IR:** 80kA Sym

A500T

- **Volts:** 5.0kVAC
- **Amps:** 0.25 to 5A
- **IR:** 80kA Sym

A720T

- **Volts:** 7.2kVAC
- **Amps:** 0.5 to 3A
- **IR:** 50kA Sym

9F60 Series EJ-1

9F60A

- **Volts:** .625kVAC
- **Amps:** 3 to 5A
- **IR:** 100kA Sym

9F60B

- **Volts:** 2.75kVAC, 5.5kVAC, 8.25kVAC, 15.5kVAC
- **Amps:** 0.5 to 3A
- **IR:** 52kA Sym, 63kA Sym, 50kA Sym, 120kA Sym

© 2025 Mersen. All rights reserved. Mersen reserves the right to change, update, or correct, without notice, any information contained in this datasheet.

0.625kV / 2.4kV / 2.75kV FERRULE MOUNTED FUSES:

0.625kV Potential Transformer fuses – 9F60 Series, EJ-1
4.25" (108 mm) Clip Centers

Catalog No.	Amp Rating	Indicating	Diameter Inches (mm)	Length Inches (mm)	Ferrule Length Inches (mm)	Max Voltage	Max IR RMS Sym	Spare Parts (Clips*)	Spare Parts (Live Parts)	Fuse Support Indoor (EK-1)
9F60AAA003	3A	Yes	0.812 (20.6)	4.625 (117.5)	1.12 (28.4)	.625 kV	100kA	C08917P	–	–
9F60AAA005	5A									
9F60AAA007	7A									
9F60AAA010	10A									

2.4kV Potential Transformer fuses – Amp-Trap Series
4.00" (102 mm) Clip Centers

Catalog No.	Amp Rating	Indicating	Diameter Inches (mm)	Length Inches (mm)	Ferrule Length Inches (mm)	Max Voltage	Max IR RMS Sym	Spare Parts (Clips*)	Spare Parts (Live Parts)	Fuse Support Indoor (EK-1)
A240T1/2E	0.5A	No	0.812 (20.6)	4.625 (117.5)	0.625 (15.9)	2.4kV	50kA	C08917P	–	–
A240T1E	1A									
A240T2E	2A									
A240T5E	5A									

2.75kV Potential Transformer fuses – 9F60 Series, EJ-1
4.25" (108 mm) Clip Centers

Catalog No.	Amp Rating	Indicating	Diameter Inches (mm)	Length Inches (mm)	Ferrule Length Inches (mm)	Max Voltage	Max IR RMS Sym	Spare Parts (Clips*)	Spare Parts (Live Parts)	Fuse Support Indoor (EK-1)
9F60AAB001	1A	Yes	0.812 (20.6)	4.625 (117.5)	1.12 (28.4)	2.75kV	52kA	C08917P	–	–
9F60AAB002	2A									

2.75kV Potential Transformer fuses – 9F60 Series, EJ-1
6" (152 mm) Clip Centers

Catalog No.	Amp Rating	Indicating	Diameter Inches (mm)	Length Inches (mm)	Ferrule Length Inches (mm)	Max Voltage	Max IR RMS Sym	Spare Parts (Clips*)	Spare Parts (Live Parts)	Fuse Support Indoor (EK-1)
9F60BBB001	1A	Yes	1.562 (40)	7.375 (187)	1.31 (33.3)	2.75kV	52kA	9F61BWW460	9F61BNW450	–
9F60BBB002	2A									
9F60BBB003	3A									

2.75kV Potential Transformer fuses – 9F60 Series, EJ-1
8.12" (206 mm) Clip Centers

Catalog No.	Amp Rating	Indicating	Diameter Inches (mm)	Length Inches (mm)	Ferrule Length Inches (mm)	Max Voltage	Max IR RMS Sym	Spare Parts (Clips*)	Spare Parts (Live Parts)	Fuse Support Indoor (EK-1)
9F60BDB001	1A	Yes	1.562 (40)	9.5 (241)	1.31 (33.3)	2.75 kV	52kA	9F61BWW460	9F61BNW450	9F61ABB101
9F60BDB002	2A									
9F60BDB003	3A									

**Use two clips per fuse*

© 2025 Mersen. All rights reserved. Mersen reserves the right to change, update, or correct, without notice, any information contained in this datasheet.

4.8kV / 5kV / 5.5kV FERRULE MOUNTED FUSES:

4.8kV Potential Transformer fuses – Amp-Trap Series
5" (127 mm) Clip Centers

Catalog No.	Amp Rating	Indicating	Diameter Inches (mm)	Length Inches (mm)	Ferrule Length Inches (mm)	Max Voltage	Max IR RMS Sym	Spare Parts (Clips*)	Spare Parts (Live Parts)	Fuse Support Indoor (EK-1)
A480T1/2E	0.5A	No	0.812 (20.6)	5.625 (143)	0.625 (15.9)	5.5kV	80kA	C08917P	–	–
A480T3/4E	0.75A									
A480T1E	1A									
A480T2E	2A									
A480T3E	3A									
A480T4E	4A									
A480T5E	5A									

5kV Potential Transformer fuses – Amp-Trap Series
5" (127 mm) Clip Centers

Catalog No.	Amp Rating	Indicating	Diameter Inches (mm)	Length Inches (mm)	Ferrule Length Inches (mm)	Max Voltage	Max IR RMS Sym	Spare Parts (Clips*)	Spare Parts (Live Parts)	Fuse Support Indoor (EK-1)
A500T1/4E-1	0.25A	No	1.00 (25.4)	5.625 (143)	0.563 (14.3)	5.5kV	80kA	–	–	–
A500T1/2E-1	0.5A									
A500T1E-1	1A									
A500T2E-1	2A									
A500T3E-1	3A									
A500T4E-1	4A									
A500T5E-1	5A									

5.5kV Potential Transformer fuses – 9F60 Series, EJ-1
6.00" (152 mm) Clip Centers

Catalog No.	Amp Rating	Indicating	Diameter Inches (mm)	Length Inches (mm)	Ferrule Length Inches (mm)	Max Voltage	Max IR RMS Sym	Spare Parts (Clips*)	Spare Parts (Live Parts)	Fuse Support Indoor (EK-1)
9F60BBD905	0.5A	Yes	1.562 (40)	7.375 (187)	1.31 (33.3)	5.5 kV	80kA	9F61BWW460	9F61BNW450	–
9F60BBD001	1A									
9F60BBD002	2A									
9F60BBD003	3A									
9F60BBN905	0.5A	No	1.562 (40)	7.375 (187)	1.31 (33.3)	5.5 kV	80kA	9F61BWW460	9F61BNW450	–
9F60BBN001	1A									
9F60BBN002	2A									
9F60BBN003	3A									

5.5kV Potential Transformer fuses – 9F60 Series, EJ-1
8.12" (206 mm) Clip Centers

Catalog No.	Amp Rating	Indicating	Diameter Inches (mm)	Length Inches (mm)	Ferrule Length Inches (mm)	Max Voltage	Max IR RMS Sym	Spare Parts (Clips*)	Spare Parts (Live Parts)	Fuse Support Indoor (EK-1)
9F60BDD905	0.5A	Yes	1.562 (40)	9.5 (241)	1.31 (33.3)	5.5 kV	63kA	9F61BWW460	9F61BNW450	9F61ABB101
9F60BDD001	1A									
9F60BDD002	2A									
9F60BDD003	3A									

**Use two clips per fuse*

© 2025 Mersen. All rights reserved. Mersen reserves the right to change, update, or correct, without notice, any information contained in this datasheet.

7.2kV / 8.25kV / 15.5kV FERRULE MOUNTED FUSES:

7.2kV Potential Transformer fuses – Amp-Trap Series
8.88" (227 mm) Clip Centers

Catalog No.	Amp Rating	Indicating	Diameter Inches (mm)	Length Inches (mm)	Ferrule Length Inches (mm)	Max Voltage	Max IR RMS Sym	Spare Parts (Clips*)	Spare Parts (Live Parts)	Fuse Support Indoor (EK-1)
A720T1/2E-1	0.5A	No	0.812 (20.6)	9.5 (241)	0.625 (15.9)	7.2kV	50kA	C08917P	–	–
A720T3/4-1	0.75A									
A720T1E-1	1A									
A720T2E-1	2A									
A720T3E-1	3A									

8.25kV Potential Transformer fuses – 9F60 Series, EJ-1
8.12" (206 mm) Clip Centers

Catalog No.	Amp Rating	Indicating	Diameter Inches (mm)	Length Inches (mm)	Ferrule Length Inches (mm)	Max Voltage	Max IR RMS Sym	Spare Parts (Clips*)	Spare Parts (Live Parts)	Fuse Support Indoor (EK-1)
9F60BDE905	0.5A	Yes	1.562 (40)	9.5 (241)	1.31 (33.3)	8.25 kV	80kA	9F61BWW460	9F61BNW450	9F61ABG101
9F60BDE001	1A									
9F60BDE002	2A									
9F60BDE003	3A									

15.5kV Potential Transformer fuses – 9F60 Series, EJ-1
11.5" (292 mm) Clip Centers

Catalog No.	Amp Rating	Indicating	Diameter Inches (mm)	Length Inches (mm)	Ferrule Length Inches (mm)	Max Voltage	Max IR RMS Sym	Spare Parts (Clips*)	Spare Parts (Live Parts)	Fuse Support Indoor (EK-1)
9F60BHH905	0.5A	Yes	1.562 (40)	12.875 (327)	1.31 (33.3)	15.5 kV	120kA	9F61BWW460	9F61BNW450	9F61ADG101 (13.8kV nominal - 95 kV BIL) 9F61ADJ101 (14.4kV nominal - 110kV BIL)
9F60BHH001	1A									
9F60BHH002	2A									
9F60BHH003	3A									

**Use two clips per fuse*

© 2025 Mersen. All rights reserved. Mersen reserves the right to change, update, or correct, without notice, any information contained in this datasheet.

Capacitor Protection

Amp-Trap® and 9F60 Series

MEDIUM VOLTAGE FUSES

MEDIUM VOLTAGE CAPACITOR FUSES



Mersen capacitor fuses are designed to IEEE C37-41. They are current-limiting operating without noise or discharge and are designed to be used indoors in a general purpose enclosure or outdoors in a weatherproof enclosure. These are non-disconnecting fuses requiring the use of a disconnect switch. These capacitor fuses provide both short circuit and overload protection and are intended to protect against capacitor case rupture or dielectric failure within the capacitor.

The various mounting configurations offer manufacturers a wide range of cost/space saving solutions and a large choice of equivalent products.

FEATURES/BENEFITS:

- High interrupting capacity
- Current limitation
- Blown-fuse indication
- Direct mount
- Clip style mount
- Bus mount
- Non-venting for silent operation

APPLICATIONS:

- Capacitor Protection
- Power Factor Correction Equipment
- Harmonic Filtering Equipment
- Induction Heating System
- High Power Drive
- Welders

CATALOG NUMBERING SYSTEM:

A — AC Voltage

250 — Voltage Rating ÷ 10 *(250 = 2.5kV)*

C — Capacitor Fuse

125 — Current Rating

-

30 — Mounting Configuration

Ratings:

A100C
- **Volts:** 1000V AC Max.
- **Amps:** 25 to 125 A
- **IR:** 50 kA Sym

A150C
- **Volts:** 1500V AC Max.
- **Amps:** 25 to 200 A
- **IR:** 40 kA Sym

A250C
- **Volts:** 2500V AC Max.
- **Amps:** 25 to 200 A
- **IR:** 50 kA Sym

A300C
- **Volts:** 3000V AC Max.
- **Amps:** 50 to 175 A
- **IR:** 50 kA Sym

A430C
- **Volts:** 4300V AC Max.
- **Amps:** 6 to 100 A
- **IR:** 65 kA Sym

A550C
- **Volts:** 5500V AC Max.
- **Amps:** 6 to 75 A
- **IR:** 65 kA Sym

9F60RJD
- **Volts:** 5500V AC Max.
- **Amps:** 25 to 80 A
- **IR:** 50 kA Sym

9F60RJF
- **Volts:** 9520V AC Max.
- **Amps:** 15 to 40A
- **IR:** 50 kA Sym

© 2025 Mersen. All rights reserved. Mersen reserves the right to change, update, or correct, without notice, any information contained in this datasheet.

1.0kV - 1.5kV CAPACITOR FUSES AMP-TRAP SERIES

Catalog Number	Ampere Rating	Melting I^2t (kA^2s)	Maximum 1 Clearing I^2t (kA^2s)	Maximum 1 Phase Interrupting Rating	Overall Length Inches (mm)	Tube Length Inches (mm)	Ind. Housing Inches (mm)	Body Dia Inches (mm)	Bracket Dimensions Inches (mm)	
1.5 kV Max Type 10 inner thread to screw					**A**	**B**	**C**	**D**	**E**	**F**
A150C25-10	25	4	12	40 kA @1500V RMS Sym	7.08 (179.8)	6.38 (162.1)	.70 (17.8)	1.42 (36.0)		
A150C50-10	50	16	50							
A150C60-10	60	25	70							
A150C75-10	75	35	110							
A150C90-10	90	50	150							
A150C100-10	100	65	200							
A150C110-10	110	80	250							
A150C120-10	120	100	310							
A150C125-10	125	125	330							
A150C130-10	130	125	330							
A150C135-10	135	130	350							
A150C140-10	140	130	350							
A150C150-10	150	150	390							
A150C160-10	160	185	480							
A150C165-10	165	185	480							
A150C175-10	175	225	600							
A150C200-10	200	300	800							
1.5 kV Max Type 20 screw to bolt (flat bracket)					**A**	**B**	**C**	**D**	**E**	**F**
A150C25-20	25	3.2	6.5	40 kA @1500V RMS Sym	6.84 (173.6)	5.73 (145.5)	1.42 (36.0)	1.10 (27.9)	3.00 (76.2)	1.25 (31.8)
A150C50-20	50	13	27							
A150C60-20	60	18	38							
A150C75-20	75	30	60							
A150C90-20	90	35	72							
A150C100-20	100	52	105							
A150C110-20	110	58	120							
A150C120-20	120	73	150							
A150C125-20	125	82	165							
A150C130-20	130	90	190							
A150C135-20	135	90	190							
A150C140-20	140	105	220							
A150C150-20	150	120	240							

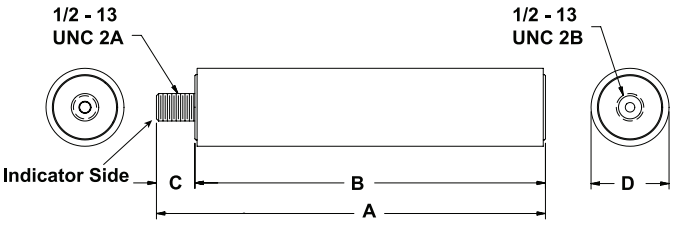

Type 10

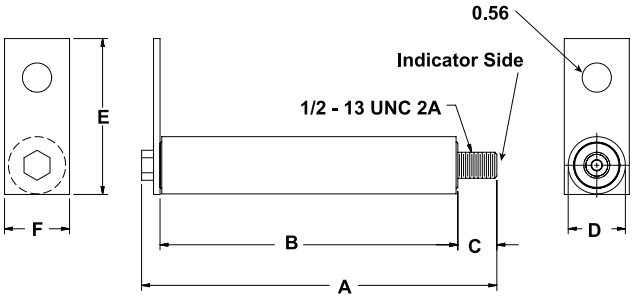

Type 20

© 2025 Mersen. All rights reserved. Mersen reserves the right to change, update, or correct, without notice, any information contained in this datasheet.

1.0kV - 1.5kV CAPACITOR FUSES AMP-TRAP SERIES

Catalog Number	Ampere Rating	Melting I^2t (kA^2s)	Maximum 1 Clearing I^2t (kA^2s)	Maximum 1 Phase Interrupting Rating	Overall Length Inches (mm)	Tube Length Inches (mm)	Ind. Housing Inches (mm)	Body Dia Inches (mm)	Bracket Dimensions Inches (mm)	
1.0 kV Max Type 30 external female to bolt (L bracket)					**A**	**B**	**C**	**D**	**E**	**F**
A100C25-30	25	4	10	50 kA @1000V RMS Sym	6.38 (162.1)	4.42 (112.3)	.75 (19.1)	1.10 (27.9)	5.76 (146.2)	1.25 (31.8)
A100C50-30	50	16	40							
A100C60-30	60	25	60							
A100C75-30	75	35	95							
A100C90-30	90	50	130							
A100C100-30	100	65	165							
A100C110-30	110	80	205							
A100C125-30	125	100	250							
1.5 kV Max Type 40 external female to external female					**A**	**B**	**C**	**D**	**E**	**F**
A150C100-40	100	125	140	40 kA @1500V RMS Sym	6.84 (173.6)	4.78 (121.4)	.51 (13.0)	1.75 (27.9)	.75 (19.1)	1.41 (35.8)
A150C110-40	110	125	180							
A150C125-40	125	130	230							
A150C130-40	130	130	230							
A150C140-40	140	150	285							
A150C150-40	150	185	315							
A150C160-40	160	185	360							
A150C175-40	175	225	410							
A150C200-40	200	300	560							
1.5 kV Max Type 50 screw to bolt (L bracket)					**A**	**B**	**C**	**D**	**E**	**F**
A150C50-50	50	13	27	40 kA @1500V RMS Sym	8.11 (206.0)	5.74 (145.8)	.75 (19.1)	1.10 (27.9)	7.49 (190.2)	1.25 (31.8)
A150C60-50	60	18	38							
A150C75-50	75	30	60							
A150C90-50	90	35	72							
A150C100-50	100	52	105							
A150C110-50	110	58	120							
A150C120-50	120	73	150							
A150C125-50	125	82	165							
A150C130-50	130	90	190							
A150C135-50	135	90	190							
A150C140-50	140	105	220							
A150C150-50	150	120	240							

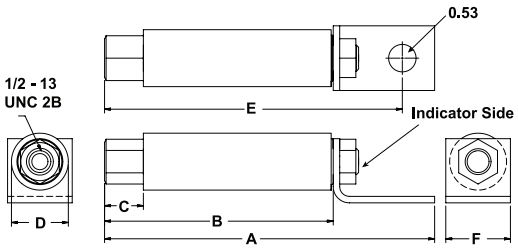

Type 30

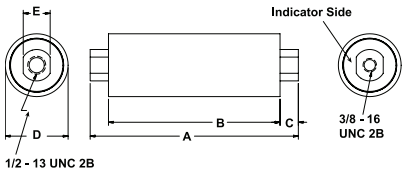

Type 40

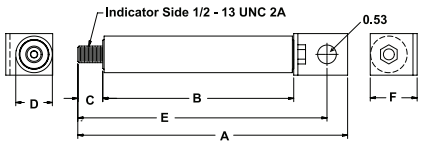

Type 50

© 2025 Mersen. All rights reserved. Mersen reserves the right to change, update, or correct, without notice, any information contained in this datasheet.

2.5kV CAPACITOR FUSES AMP-TRAP SERIES

Catalog Number	Ampere Rating	Melting I^2t (kA^2s)	Maximum 1 Clearing I^2t (kA^2s)	Maximum 1 Phase Interrupting Rating	Overall Length Inches (mm)	Tube Length Inches (mm)	Ind. Housing Inches (mm)	Body Dia Inches (mm)	Bracket Dimensions Inches (mm)	
2.5 kV Max Type 10 inner thread to screw					A	B	C	D	E	F
A250C25-10	25	3	9	50 kA @2500V RMS Sym	7.67 (194.8)	6.92 (175.8)	.75 (19.1)	1.42 (36.0)		
A250C50-10	50	12	35							
A250C65-10	65	18	60							
A250C75-10	75	25	85							
A250C80-10	80	25	85							
A250C100-10	100	45	150							
A250C110-10	110	60	190							
A250C125-10	125	75	240							
A250C135-10	135	115	395							
A250C150-10	150	130	460							
A200C165-10	165	150	350	40 kA @2000V RMS Sym	7.67 (194.8)	6.92 (175.8)	.75 (19.1)	1.42 (36.0)		
A200C175-10	175	165	440							
A200C200-10	200	225	500							
2.5 kV Max Type 30 external female to bolt (L bracket)					A	B	C	D	E	F
A250C25-30	25	3	9	50 kA @2500V RMS Sym	9.41 (239.0)	6.66 (169.2)	.75 (19.1)	1.10 (27.9)	8.79 (223.2)	1.25 (31.8)
A250C50-30	50	12	35							
A250C65-30	65	18	60							
A250C75-30	75	25	85							
A250C80-30	80	25	85							
A250C100-30	100	45	150							
A250C110-30	110	60	190							
A250C125-30	125	75	240							
2.5 kV Max Type 50 screw to bolt (L bracket)					A	B	C	D	E	F
A250C25-50	25	3	9	50 kA @2500V RMS Sym	9.11 (231.4)	6.74 (171.2)	.75 (19.1)	1.10 (27.9)	8.49 (215.6)	1.25 (31.8)
A250C50-50	50	12	35							
A250C65-50	65	18	60							
A250C75-50	75	25	85							
A250C80-50	80	25	85							
A250C100-50	100	45	150							
A250C110-50	110	60	190							
A250C125-50	125	75	240							
A250C135-50	135	115	395							
A250C150-50	150	130	460							
A200C165-50	165	150	350	40 kA @2000V RMS Sym	9.29 (236.0)	6.92 (175.8)	.75 (19.1)	1.42 (36.0)	8.67 (220.2)	1.25 (31.8)
A200C175-50	175	165	440							
A200C200-50	200	225	500							

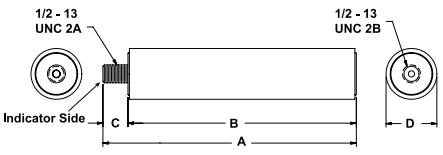

Type 10

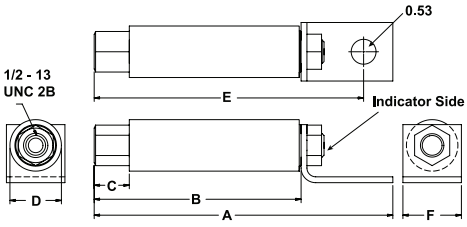

Type 30

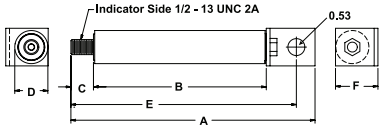

Type 50

© 2025 Mersen. All rights reserved. Mersen reserves the right to change, update, or correct, without notice, any information contained in this datasheet.

3.0kV CAPACITOR FUSES AMP-TRAP SERIES

Catalog Number	Ampere Rating	Melting I^2t (kA^2s)	Maximum 1 Clearing I^2t (kA^2s)	Maximum 1 Phase Interrupting Rating	Overall Length Inches (mm)	Tube Length Inches (mm)	Ind. Housing Inches (mm)	Body Dia Inches (mm)	Bracket Dimensions Inches (mm)	
3.0 kV Max Type 10 inner thread to screw					**A**	**B**	**C**	**D**	**E**	**F**
A300C50-10	50	12	35	50 kA @3000V RMS Sym	10.16 (258.1)	9.33 (237.0)	.75 (19.1)	1.10 (27.9)		
A300C60-10	60	18	65							
A300C75-10	75	26	80							
A300C95-10	95	45	140							
A300C100-10	100	45	140							
A300C115-10	115	60	200							
A300C125-10	125	75	260		10.16 (258.1)	9.33 (237.0)	.75 (19.1)	1.42 (36.0)		
A300C130-10	130	75	260							
A300C150-10	150	105	350							
A300C175-10	175	165	530							
3.0 kV Max Type 20 screw to bolt (flat bracket)					**A**	**B**	**C**	**D**	**E**	**F**
A300C50-20	50	12	35	50 kA @3000V RMS Sym	10.59 (269.1)	9.33 (237.0)	.75 (19.1)	1.10 (27.9)	3.00 (76.2)	1.25 (31.8)
A300C60-20	60	18	65							
A300C75-20	75	26	80							
A300C95-20	95	45	140							
A300C100-20	100	45	140							
A300C115-20	115	60	200		10.59 (269.0)	9.33 (237.0)	.75 (19.1)	1.42 (36.0)	3.00 (76.2)	1.25 (31.8)
A300C125-20	125	75	260							
A300C130-20	130	75	260							
A300C150-20	150	105	350							
A300C175-20	175	165	530							
3.0 kV Max Type 60 bolt (L bracket) to bolt (L bracket)					**A**	**B**	**C**	**D**	**E**	**F**
A300C50-60	50	12	35	50 kA @3000V RMS Sym						
A300C60-60	60	18	65							
A300C75-60	75	26	80							
A300C95-60	95	45	140							
A300C100-60	100	45	140							
A300C115-60	115	60	200		13.27 (337.1)	9.41 (239.0)	.47 (11.9)	1.42 (36.0)	12.02 (305.2)	1.25 (31.8)
A300C125-60	125	75	260							
A300C130-60	130	75	260							
A300C150-60	150	105	350							
A300C175-60	175	165	530							

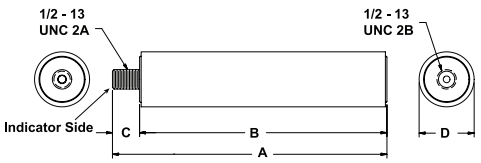

Type 10

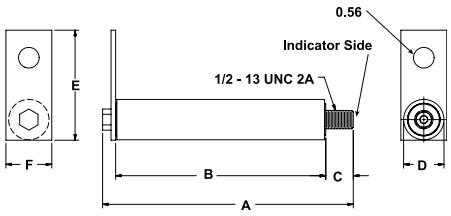

Type 20

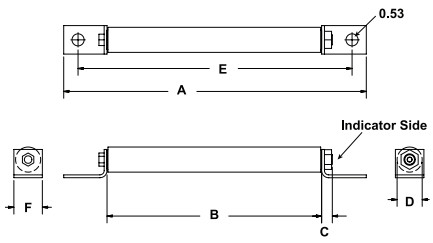

Type 60

© 2025 Mersen. All rights reserved. Mersen reserves the right to change, update, or correct, without notice, any information contained in this datasheet.

4.3kV CAPACITOR FUSES AMP-TRAP SERIES

Catalog Number	Ampere Rating	Melting I^2t (kA^2s)	Maximum 1 Clearing I^2t (kA^2s)	Maximum 1 Phase Interrupting Rating	Overall Length Inches (mm)	Tube Length Inches (mm)	Ind. Housing Inches (mm)	Body Dia Inches (mm)	Bracket Dimensions Inches (mm)	
4.3 kV Max Type 15 external female to bolt					**A**	**B**	**C**	**D**	**E**	**F**
A430C6-15	6	0.4	2.49	65 kA @4300V RMS Sym	9.50 (241.3)	7.12 (180.8)	.75 (19.1)	2.00 (50.8)	8.00 (203.2)	.75 (19.1)
A430C8-15	8	0.73	4.31							
A430C10-15	10	1.14	6.38							
A430C12-15	12	1.6	8.64							
A430C18-15	18	3	15							
A430C20-15	20	4.5	22.1							
A430C25-15	25	6.5	31.2							
A430C30-15	30	7.7	36.2							
A430C35-15	35	9	41.4							
A430C45-15	45	12	54.6							
A430C50-15	50	15	68							
A430C65-15	65	29	84							
A430C75-15	75	36	100							
A430C80-15	80	42	120							
A430C90-15	90	58	160							
A430C100-15	100	66	180							
4.3 kV Max Type 70 tube to tube					**A**	**B**	**C**	**D**	**E**	**F**
A430C6-70	6	0.4	2.49	65 kA @4300V RMS Sym	10.00 (254.0)	7.12 (180.8)	1.00 (25.4)	2.00 (50.8)	8.00 (203.2)	.63 (15.9)
A430C8-70	8	0.73	4.31							
A430C10-70	10	1.14	6.38							
A430C12-70	12	1.6	8.64							
A430C18-70	18	3	15							
A430C20-70	20	4.5	22.1							
A430C25-70	25	6.5	31.2							
A430C30-70	30	7.7	36.2							
A430C35-70	35	9	41.4							
A430C45-70	45	12	54.6							
A430C50-70	50	15	68							
A430C65-70	65	29	84							
A430C75-70	75	36	100							
A430C80-70	80	42	120							
A430C90-70	90	58	160							
A430C100-70	100	66	180							
4.35 kV Max Type 75 external female to tube					**A**	**B**	**C**	**D**	**E**	**F**
A430C6-75	6	0.4	2.49	65 kA @ 4300V RMS Sym	9.75 (247.7)	7.12 (180.8)	1.00 (25.4)	2.00 (50.8)	8.00 (203.2)	0.63 (15.9)
A430C8-75	8	0.73	4.31							
A430C10-75	10	1.14	6.38							
A430C12-75	12	1.6	8.64							
A430C18-75	18	3	15							
A430C20-75	20	4.5	22.1							
A430C25-75	25	6.5	31.2							
A430C30-75	30	7.7	36.2							
A430C35-75	35	9	41.4							
A430C45-75	45	12	54.6							
A430C50-75	50	15	68							
A430C65-75	65	29	84							
A430C75-75	75	36	100							
A430C80-75	80	42	120							
A430C90-75	90	58	160							
A430C100-75	100	66	180							

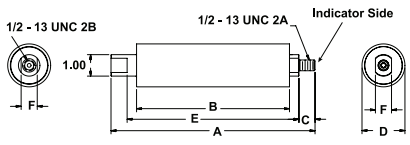

Type 15

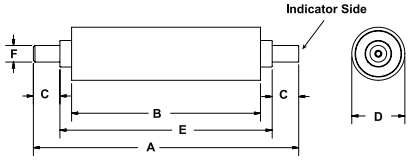

Type 70

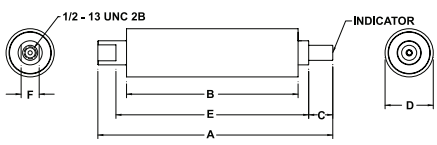

Type 75

© 2025 Mersen. All rights reserved. Mersen reserves the right to change, update, or correct, without notice, any information contained in this datasheet.

5.5kV CAPACITOR FUSES AMP-TRAP SERIES

Catalog Number	Ampere Rating	Melting I^2t (kA^2s)	Maximum 1 Clearing I^2t (kA^2s)	Maximum 1 Phase Interrupting Rating	Overall Length Inches (mm)	Tube Length Inches (mm)	Ind. Housing Inches (mm)	Body Dia Inches (mm)	Bracket Dimensions Inches (mm)	
5.5 kV Max Type 15 external female to bolt					**A**	**B**	**C**	**D**	**E**	**F**
A550C6-15	6	0.4	2.49	65 kA @ 5500V RMS Sym	9.50 (241.3)	7.12 (180.8)	.75 (19.1)	2.00 (50.8)	8.00 (203.2)	.75 (19.1)
A550C8-15	8	0.73	4.31							
A550C10-15	10	1.14	6.38							
A550C12-15	12	1.6	8.64							
A550C18-15	18	3	15							
A550C20-15	20	4.5	22.1							
A550C25-15	25	6.5	31.2							
A550C30-15	30	7.7	36.2							
A550C35-15	35	9	41.4							
A550C40-15	40	12	54.6							
A550C50-15	50	15	68	50 kA @ 5500V RMS Sym						
A550C65-15	65	35	156							
A550C75-15	75	43	186							
5.5 kV Max Type 70 tube to tube					**A**	**B**	**C**	**D**	**E**	**F**
A550C6-70	6	0.4	2.49	65 kA @ 5500V RMS Sym	10.00 (254.0)	7.12 (180.8)	1.00 (25.4)	2.00 (50.8)	8.00 (203.2)	.63 (15.9)
A550C8-70	8	0.73	4.31							
A550C10-70	10	1.14	6.38							
A550C12-70	12	1.6	8.64							
A550C18-70	18	3	15							
A550C20-70	20	4.5	22.1							
A550C25-70	25	6.5	31.2							
A550C30-70	30	7.7	36.2							
A550C35-70	35	9	41.4							
A550C40-70	40	12	54.6							
A550C50-70	50	15	68	50 kA @ 5500V RMS Sym						
A550C65-70	65	35	156							
A550C75-70	75	43	186							

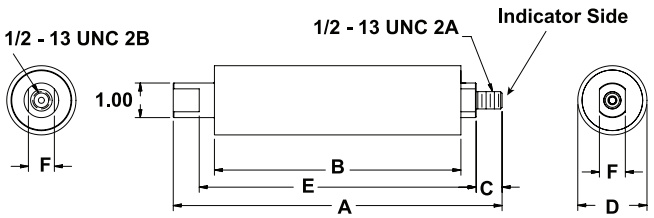

Type 15

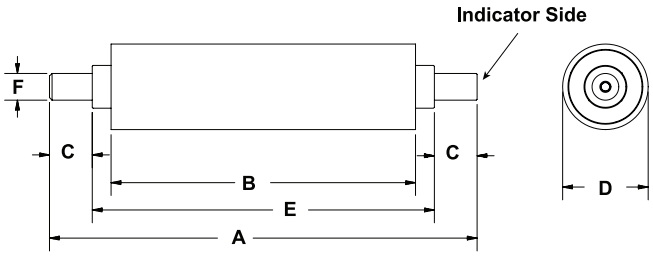

Type 70

© 2025 Mersen. All rights reserved. Mersen reserves the right to change, update, or correct, without notice, any information contained in this datasheet.

5.5kV / 9.52kV CAPACITOR FUSES AMP-TRAP SERIES

5.5kV Capacitor Fuses - Amp-Trap Series

Catalog Number	Ampere Rating	Melting I^2t (kA^2s)	Maximum Clearing I^2t (kA^2s)	Maximum 1 Phase Interrupting Rating (kA)	Overall Length Inches (mm)	Tube Length Inches (mm)	Indicator Housing Inches (mm)	Body Dia Inches (mm)	Inches (mm)	Inches (mm)
5.5 kV Max Type 75 external female to tube					A	B	C	D	E	F
A550C6-75	6	0.4	2.49	65 kA @ 5500V RMS Sym	9.75 (247.7)	7.12 (180.8)	1.00 (2.54)	2.00 (50.8)	8.00 (203.2)	0.63 (15.9)
A550C8-75	8	0.73	4.31							
A550C10-75	10	1.14	6.38							
A550C12-75	12	1.6	8.64							
A550C18-75	18	3	15							
A550C20-75	20	4.5	22.1							
A550C25-75	25	6.5	31.2							
A550C30-75	30	7.7	36.2							
A550C35-75	35	9	41.4							
A550C40-75	40	12	54.6							
A550C50-75	50	15	68							
A550C65-75	65	35	156	50 kA @ 5500V RMS Sym						
A550C75-75	75	43	186							

Type 75

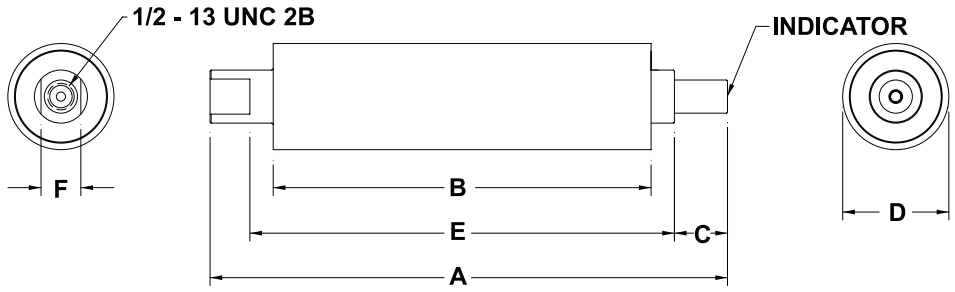

5.5kV Capacitor fuses – 9F60 series, EJO-5

12" (305 mm) Clip Centers clip-in mounting* - Suitable for use indoors or outdoors

Catalog No.	Amp Rating	No. of Barrels	Indicating	Diameter Inches (mm)	Length Inches (mm)	Max Voltage	Max IR RMS Sym
9F60RJD025	25A	1	Yes	2.08 (52.8)	14.0 (356)	5.5 kV	50kA
9F60RJD040	40A						
9F60RJD080	80A						

9.52kV Capacitor fuses – 9F60 series, EJO-5

12" (305 mm) Clip Centers clip-in mounting* - Suitable for use indoors or outdoors

Catalog No.	Amp Rating	No. of Barrels	Indicating	Diameter Inches (mm)	Length Inches (mm)	Max Voltage	Max IR RMS Sym
9F60RJF015	15A	1	Yes	2.08 (52.8)	14.0 (356)	9.25 kV	50kA
9F60RJF025	25A						
9F60RJF040	40A						

**EJO-5 Capacitor fuses are typically mounted directly on the capacitor.*

© 2025 Mersen. All rights reserved. Mersen reserves the right to change, update, or correct, without notice, any information contained in this datasheet.

Overhead Distribution Protection

Sure Guard 9F59U Series ETP Fuses

MEDIUM VOLTAGE FUSES

8.3kV, 15.5kV, AND 23.0kV OVERHEAD BACK-UP FUSES



The Sure Guard ETP back-up current-limiting fuses are designed to protect overhead distribution systems and are used in series with another protective device (such as an expulsion fuse). This combination limits the high-fault current to a safe level, thus providing protection through the complete range. As its name implies, the "ETP" is for External Transformer Protection. For conventional transformers protected by expulsion-fuses cutouts, the ETP can be installed in series with the cutout. For self protected transformers, the ETP can be applied on the high-voltage bushing in series with the internal transformer expulsion fuse.

DEFINITIONS:

Back-up Current-Limiting Fuses:

A back-up current-limiting fuse is a fuse that can interrupt any current between its rated minimum interrupting current and its maximum interrupting current. Back-up fuses are not designed or intended to open under overload conditions.

RATINGS:

9F59UBC:

- **Volts:** 8.3kV AC
- **Amps:** 12K to 80K
- **IR:** 50kA Sym

9F59UBD:

- **Volts:** 15.5kV AC
- **Amps:** 12K to 80K
- **IR:** 50kA Sym

9F59UBE:

- **Volts:** 23.0kV AC
- **Amps:** 12K to 25K
- **IR:** 50kA Sym

FEATURES/BENEFITS:

- Various hardware options
- Current-limiting for superior equipment protection
- Weather-tight construction
- High fault current interrupting capability: I.R. Sym = 50kA at ETP voltage rating.

APPLICATIONS:

- Short-circuit protection of overhead distribution systems

FUSE CURVES:

- Minimum Melt: GES8228B
- Total Clear: GES-8229B
- Peak Let-through: GET-6693A

© 2025 Mersen. All rights reserved. Mersen reserves the right to change, update, or correct, without notice, any information contained in this datasheet.

ETP SELECTION DATA

ETP Rating	Rating (kV) System kV (maximum) 3PH	PH-PH	PH-N	Model Number	Recommended Max. Expulsion	Min. I.C. Amperes	Max. Total I^2t	Length - Dimension "A" (inches)**
8.3	15	15	8.3	9F59UBC___ ___1	8T or 12K	440	16,000	5.9
				9F59UBC___ ___2	15T or 25K	450	50,000	10.26
				9F59UBC___ ___4	25T or 40K	560	140,000	10.26
				9F59UBC___ ___8*	50T or 80K	1,200	88,000	10.26
15.5	27	27	15.5	9F59UBD___ ___1	8T or 12K	510	16,000	10.26
				9F59UBD___ ___2	15T or 25K	480	50,000	15.68
				9F59UBD___ ___4	25T or 40K	890	140,000	15.68
				9F59UBD___ ___8*	50T or 80K	1,200	88,000	15.68
23.0	38	38	23.0	9F59UBE___ ___1	8T or 12K	280	16,000	15.68
				9F59UBE___ ___2	15T or 25K	460	70,000	15.68

*** For dimensions, refer to outline drawings on next page.*

HARDWARE SELECTION

Description	Figure Number	Code
Caps (see drawings on next page)		
Spade and Stud	A	1
Spade and Spade	B	2
Spade and Spade (parallel config.)	C	*
** Refer to Table 1 for available model numbers and refer to Figure C for dimensions (next page).*		
Hardware (see drawings below)		
Without hardware	—	0
(1) Adapter	1	1
(1) Eyebolt terminal	2	2
(1) Parallel groove	3	3
Adapter and eyebolt terminal	1,2	4
Adapter and parallel groove	1,3	5
Eyebolt terminal and parallel groove	2,3	6
(2) Eyebolt terminals	2	7
(2) Parallel groove	3	8

TABLE 1: AVAILABLE MODEL NUMBERS IN PARALLEL CONFIGURATION

Catalog Number	ETP Rating	Catalog Number	ETP Rating
9F59UBC208	8.3	9F59UBD208	15.5
9F59UBC218	8.3	9F59UBD218	15.5
9F59UBC228	8.3	9F59UBD228	15.5
9F59UBC238	8.3	9F59UBD238	15.5
9F59UBC248	8.3	9F59UBD248	15.5
9F59UBC258	8.3	9F59UBD258	15.5
9F59UBC268	8.3	9F59UBD268	15.5
9F59UBC278	8.3	9F59UBD278	15.5
9F59UBC288	8.3	9F59UBD288	15.5

HARDWARE OPTIONS:

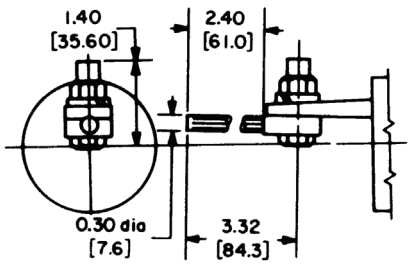

Fig. 1. Adapter only
9F59AAW007

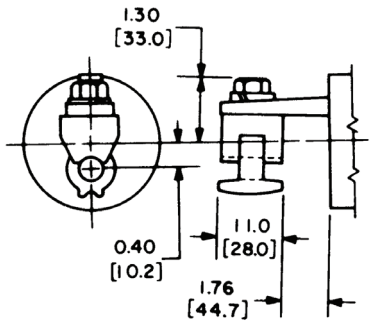

Fig. 2. Eyebolt only,
for 6-2/0 cable
9F59AAW008

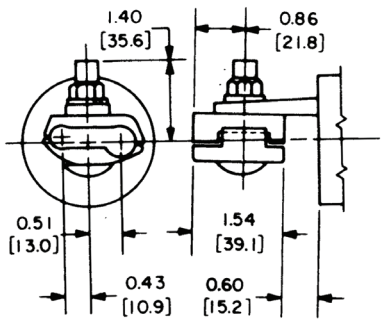

Fig. 3. Parallel groove only,
for 2/0 to 250MCM cable
9F59AAW009

© 2025 Mersen. All rights reserved. Mersen reserves the right to change, update, or correct, without notice, any information contained in this datasheet.

DIMENSIONS:

Figure A

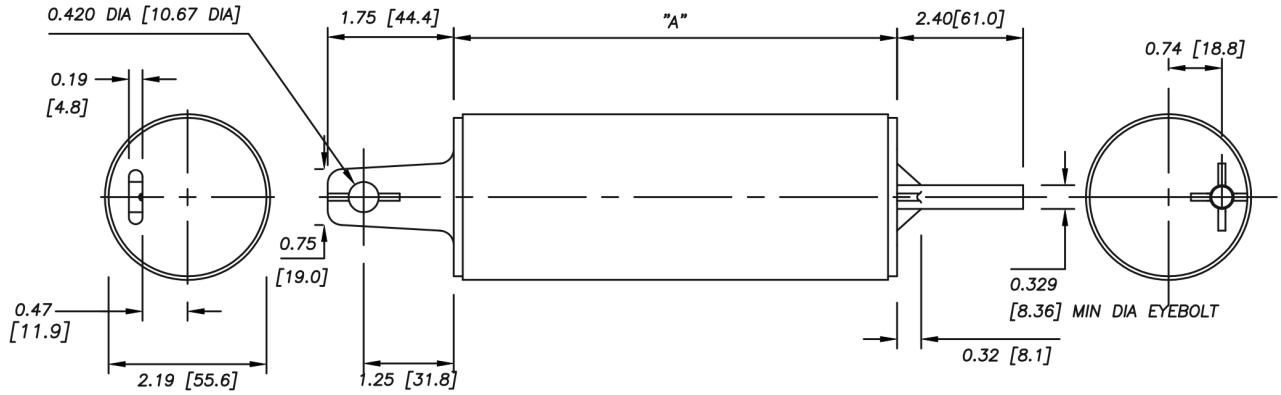

Figure B

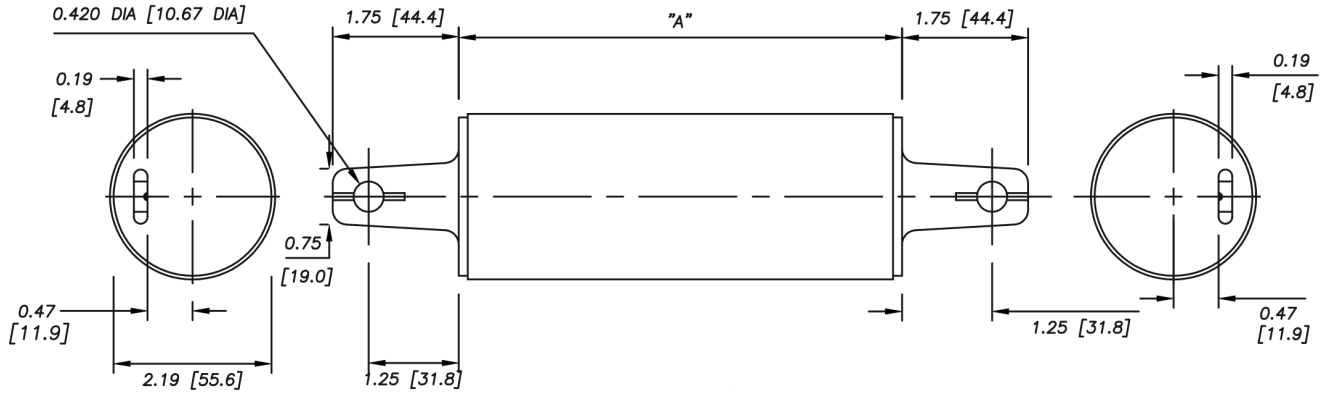

Figure C

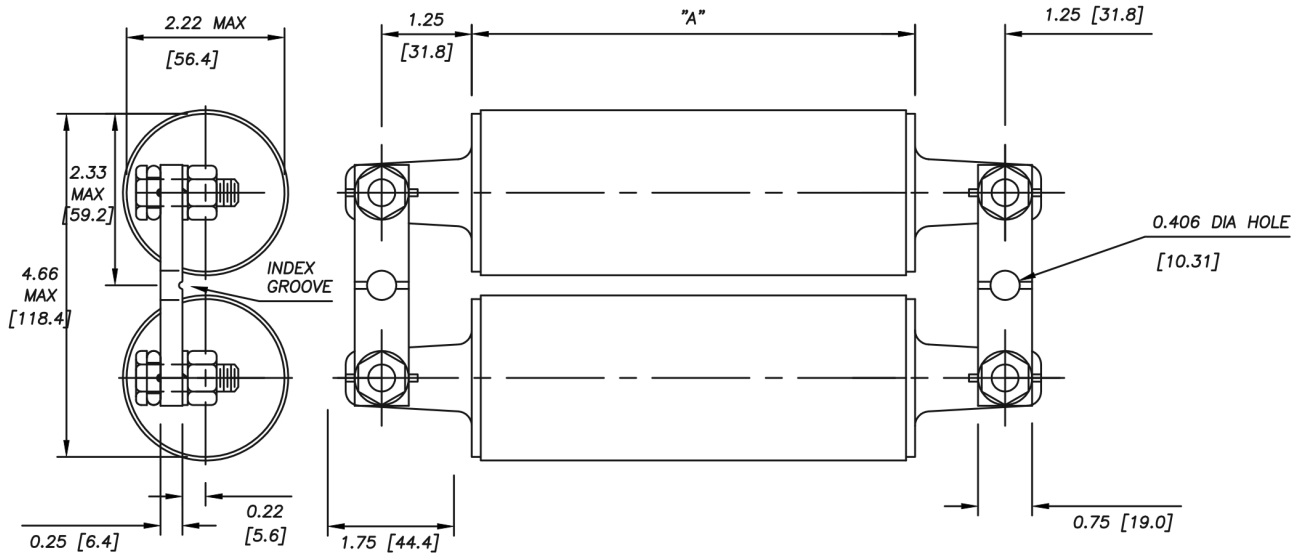

© 2025 Mersen. All rights reserved. Mersen reserves the right to change, update, or correct, without notice, any information contained in this datasheet.