Medium Voltage Fuses & Accessories

Various types. Different configurations. Many ratings. One solution.



Your problem: On one hand you need current limiting protection for medium voltage transformers and distribution systems that supply industrial plants, shopping centers, hospitals, schools, office buildings and underground residential service. On the other, you need high short-circuit current protection to avoid damages to busway, motors, switches and other equipment.

Our solution: Current-limiting power fuses are widely used in these applications because they afford excellent over-current protection and noiseless operation, and because they can be used in confined spaces. The amount of damage in the faulted area and the mechanical stress and strain on busway, switches and other apparatus carrying the fault current is proportional to the square of the current and to the length of time the fault persists. By limiting the let through energy at the fault, properly applied current-limiting fuses assist in limiting or preventing short-circuit damage to busway, circuit breakers, switches, and other electrical components. Current-limiting power fuses are manufactured in ratings ranging from 1kV through 38 kV and in continuous current ratings from 0.5 amperes through 1200 amperes. Various designs are available for use with motors, transformers, capacitors, and circuit-protection equipment.

Want more information fast? For more technical or application-specific information, please call our Medium Voltage experts, at 978-462-6662; 416-252-9371 in Canada; or visit our website at **us-ferrazshawmut.mersen.com.**

E Medium Voltage Fuses and Accessories

Transformer Protection

- Amp-Trap® CS-3 and 9F60/9F62 Series E2
- Amp-Trap® & 9F62 Bolt-In Series ... E12
- Amp-Trap® CL-14 Series E16

Motor Protection

- Amp-Trap® & 9F60 Series E21
- Amp-Trap® Bolt-in Series E27
- Amp-Trap® DIN-style Series E30

Potential Transformer Protection

- Amp-Trap® & 9F60 Series PT Fuses E32

Capacitor Protection

- Amp-Trap® & 9F60 Series E36

Distribution Transformer Protection

- Sure Guard 9F59U Series ETP E44

IEC Standard Back-up Fuse Links

- IEC Standard Back-up Fuse-Links E48

Accessories

- Type EK 9F61 Series E53

FERRAZ SHAWMUT IS NOW MERSEN

MERSEN

Transformer Protection

Amp-Trap® CS-3 Series and 9F60/9F62 Series

2.75kV, 5.5kV, 8.25kV, 15.5kV, 25.8kV and 38kV Ferrule Mounted Fuses

Mersen fuses for the protection of transformers and distribution lines deliver overload and short circuit protection. These current-limiting fuses will melt at current that can be as low as 1.7 times the fuse current ratings up to its maximum interrupting rating. These fuses are designed to withstand the transformer magnetizing inrush current. They have 2 (size C), 3 (size D) and 4 (size E) inch diameter barrels with ferrules and are mounted in spring reinforced clips.



Features/Benefits:

- Amp-Trap CS-3 and 9F62 series are UL listed for compatibility with UL listed equipment.
- Ferrule mounting for standard clips and interchangeability with other brands of fuses.
- Current-limiting for superior equipment protection.
- Non-venting for silent operation
- Metal embossed catalog number and manufacturing date for lasting identification.
- Outdoor usage for the 9F62 and 9F60 type EJO.
- Blown-fuse indicator to give positive identification of open fuse:
  - Amp-Trap: 2” Barrel 1 lb tripped force - 0.19 Inch
  - Amp-Trap: 3” Barrel 2 lb tripped force - 0.50 Inch
  - 9F60/9F62: 0.125 lb tripped force – 0.20 Inch
- Accessories - see page E53

Highlights:

- E-Rated
- UL listed
- Outdoor use



Applications:

- Protection for 2.4kV to 34.5kV transformers or distribution systems.

Definitions:

General Purpose Current-Limiting Fuses (Per IEEE Std C37.40-2003):
A general purpose current-limiting fuse is one that is capable of interrupting all currents from its rated interrupting current down to the current that causes melting of the fusible element(s) in one hour or more.

E-Rating: E-Rated fuses are general purpose fuses that operate as follow (Per ANSI C37.46-2000):

- 100E or less – must melt in 300 seconds (5 mins.) at 200 to 240% of E (ampere) rating.
- Over 100E – must melt in 600 seconds (10 mins.) at 220 to 264% of E (ampere) rating.
- Example: A 100E fuse must melt in 300 seconds with an applied current of 200 to 240 amperes.

Power Distribution Fuses:
Defines fuses designed prior to the time where the ANSI standards defined the term “General Purpose” and do not meet all of the general purpose definition. These fuses are capable of interrupting all currents above 2.2 to 3 times the fuse’s rated current up to its maximum interrupting rating.

Ratings

- See page E3 for listing

Approvals:

- UL listed to standard File E143362

UL LISTED

Transformer Protection

Amp-Trap® CS-3 Series and 9F60/9F62 Series

Ferrule Mounted Fuses

Amp-Trap CS-3 Series: (Indoors or outdoors in a weatherproof enclosure)

A055F: 5.5kV – AC: 5E to 450E – 63kA I.R. Sym
A825X: 8.25kV – AC: 10E to 200E – 50kA I.R. Sym
A155F: 15.5kV – AC: 5E to 200E – 50 kA I.R. Sym

9F62 Series Type EJO-1: (Indoors and outdoors)



9F62: 5.5kV – AC: 25A to 450A – 50kA IR Sym
9F62: 8.3kV – AC: 20A to 250A – 50 kA IR Sym
9F62: 15.5kV – AC: 20A to 200A – 50 kA IR Sym

9F60 Series Type EJO-1: (Indoors and outdoors)



9F60: 2.75kV – AC: 1E to 200E – 50kA IR Sym
9F60: 5.5kV – AC: 0.5E to 200E – 50kA IR Sym
9F60: 8.25kV – AC: 0.5E to 200E – 50kA IR Sym
9F60: 15.5kV – AC: 0.5E to 100E – 50kA IR Sym
9F60: 25.8kV – AC: 0.5E to 100E – 25kA to 35kA IR Sym
9F60: 38kV – AC: 1E to 80E – 13kA to 26kA IR Sym

9F60 Series Type EJ-1: (Indoors or outdoors in a weatherproof enclosure)

9F60: 2.75kV – AC: 1E to 200E – 47kA to 52kA IR Sym
9F60: 5.5kV – AC: 0.5E to 25E – 63kA IR Sym
9F60: 15.5kV – AC: 2E to 175E – 31kA to 50kA IR Sym
9F60: 25.8kV – AC: 0.5E to 2E – 35kA IR Sym

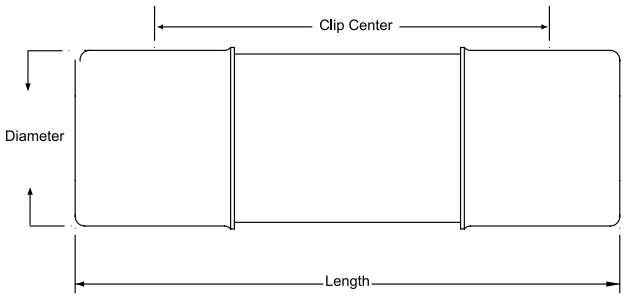

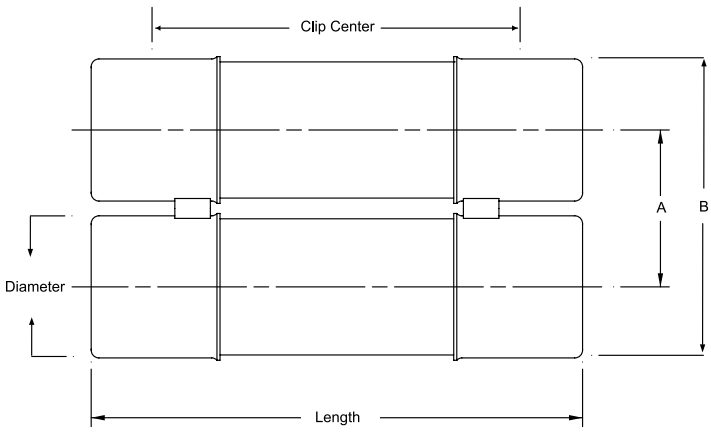

9F series A = 3.31 inches (84mm)
9F series B = 6.16 inches (160mm)
Amp-Trap series A = 3.63 inches (92 mm)
Amp-Trap series B = 6.63 inches (169 mm)

Transformer Protection

Amp-Trap® CS-3 Series and 9F60/9F62 Series

2.75kV Ferrule mounted fuses:

2.75kV Power Distribution fuses – 9F60 series, E-Rated EJ-1

7” (178 mm) Clip Centers - Suitable for use indoors or in an enclosure only

Catalog No.	Amp Rating	No. of Barrels	Indicating	Diameter Inches (mm)	Length Inches (mm)	Max Voltage	Max IR RMS Sym	Fuse Support Indoor (EK-1)	Fuse Support Outdoor (EK0-1)	Fuse Disconnect Indoor (EK-3)	Fuse Disconnect Outdoor (EK0-3)
9F60CCB001	1E	1	Yes	2 (50.8)	9.18 (233)	2.75 kV	47kA	9F61AAB201	N/A	9F61AAB205	N/A
9F60CCB002	2E										
9F60CCB003	3E										
9F60CCB005	5E										
9F60CCB007	7E										
9F60CCB010	10E										
9F60CCB015	15E	1	Yes	2 (50.8)	9.18 (233)	2.75 kV	52kA	9F61AAB201	N/A	9F61AAB205	N/A
9F60CCB020	20E										
9F60CCB025	25E										
9F60ECB030	30E	1	Yes	3 (76.2)	10.88 (276)	2.75 kV	52kA	9F61AAB301	N/A	9F61AAB305	N/A
9F60ECB040	40E										
9F60ECB050	50E										
9F60ECB065	65E										
9F60ECB080	80E										
9F60ECB100	100E										
9F60GCB125	125E	2	Yes	3 (76.2)	10.88 (276)	2.75 kV	52kA	9F61AAB401	N/A	9F61AAB405	N/A
9F60GCB150	150E										
9F60GCB200	200E										

2.75kV Power Distribution fuses – 9F60 series, E-Rated EJ-1

9” (229 mm) Clip Centers - Suitable for use indoors or in an enclosure only

Catalog No.	Amp Rating	No. of Barrels	Indicating	Diameter Inches (mm)	Length Inches (mm)	Max Voltage	Max IR RMS Sym	Fuse Support Indoor (EK-1)	Fuse Support Outdoor (EK0-1)	Fuse Disconnect Indoor (EK-3)	Fuse Disconnect Outdoor (EK0-3)
9F60CEB001	1E	1	Yes	2 (50.8)	11.18 (284)	2.75 kV	52kA	9F61ACB201	N/A	9F61ACB205	N/A
9F60CEB002	2E										
9F60CEB003	3E										
9F60CEB005	5E										
9F60CEB007	7E										
9F60CEB010	10E										
9F60CEB015	15E										
9F60CEB020	20E										
9F60CEB025	25E										

2.75kV Power Distribution fuses – 9F60 Series, E-Rated EJO-1

12” (305 mm) Clip Centers - Suitable for use indoors or outdoors



Catalog No	Amp Rating	No. of Barrels	Indicating	Diameter Inches (mm)	Length Inches (mm)	Max Voltage	Max IR RMS Sym	Fuse Support Indoor (EK-1)	Fuse Support Outdoor (EK0-1)	Fuse Disconnect Indoor (EK-3)	Fuse Disconnect Outdoor (EK0-3)
9F60DJB001	1E	1	Yes	2 (50.8)	14.18 (360)	2.75 kV	50kA	9F61AEG201	9F61CEF209	9F61AEG205	9F61CEF210
9F60DJB002	2E										
9F60DJB003	3E										
9F60DJB005	5E										
9F60DJB007	7E										
9F60DJB010	10E										
9F60DJB015	15E										
9F60DJB020	20E										
9F60DJB025	25E										
9F60FJB030	30E	1	Yes	3 (76.2)	15.88 (403)	2.75 kV	50kA	9F61AEB301	9F61CEF309	9F61AEB305	9F61CEF310
9F60FJB040	40E										
9F60FJB050	50E										
9F60FJB065	65E										
9F60FJB080	80E										
9F60FJB100	100E										
9F60HJB125	125E	2	Yes	3 (76.2)	15.88 (403)	2.75 kV	50kA	9F61AEB401	9F61CEF409	9F61AEB405	9F61CEF410
9F60HJB150	150E										
9F60HJB200	200E										

Transformer Protection

Amp-Trap® CS-3 Series and 9F60/9F62 Series

5.5kV Ferrule mounted fuses:

5.5kV Power Distribution fuses – 9F60 Series, E-Rated EJ-1

9" (229 mm) Clip Centers - Suitable for use indoors or in an enclosure only

Catalog No.	Amp Rating	No. of Barrels	Indicating	Diameter Inches (mm)	Length Inches (mm)	Max Voltage	Max IR RMS Sym	Fuse Support Indoor (EK-1)	Fuse Support Outdoor (EK0-1)	Fuse Disconnect Indoor (EK-3)	Fuse Disconnect Outdoor (EK0-3)
9F60CED905	0.5E	1	Yes	2 (50.8)	11.18 (284)	5.5 kV	63kA	9F61ACB201	N/A	9F61ACB205	N/A
9F60CED001	1E										
9F60CED002	2E										
9F60CED003	3E										
9F60CED005	5E										
9F60CED007	7E										
9F60CED010	10E										
9F60CED015	15E										
9F60CED020	20E										
9F60CED025	25E										

5.5kV E-Rated Amp-Trap CS-3 Series – UL Listed

12" (305 mm) Clip Centers - Suitable for use indoors or in an enclosure only

Catalog No.	Amp Rating	No. of Barrels	Indicating	Diameter Inches (mm)	Length Inches (mm)	Max Voltage	Max IR RMS Sym	Fuse Support Indoor (EK-1)	Fuse Support Outdoor (EK0-1)	Fuse Disconnect Indoor (EK-3)	Fuse Disconnect Outdoor (EK0-3)
A055F1C0R0-5E	5E	1	Yes	2 (50.8)	14.18 (360)	5.5kV	63kA	9F61AEG201	N/A	9F61AEG205	N/A
A055F1C0R0-7E	7E										
A055F1C0R0-10E	10E										
A055F1C0R0-15E	15E										
A055F1C0R0-20E	20E										
A055F1C0R0-25E	25E										
A055F1C0R0-30E	30E										
A055F1C0R0-40E	40E										
A055F1C0R0-50E	50E										
A055F1C0R0-65E	65E										
A055F1D0R0-10E	10E	1	Yes	3 (76.2)	15.88 (403)	5.5kV	63kA	9F61AEB301	N/A	9F61AEB305	N/A
A055F1D0R0-15E	15E										
A055F1D0R0-20E	20E										
A055F1D0R0-25E	25E										
A055F1D0R0-30E	30E										
A055F1D0R0-40E	40E										
A055F1D0R0-50E	50E										
A055F1D0R0-65E	65E										
A055F1D0R0-80E	80E										
A055F1D0R0-100E	100E										
A055F1D0R0-125E	125E										
A055F1D0R0-150E	150E										
A055F1D0R0-175E	175E										
A055F1D0R0-200E	200E										
A055F2D0R0-250E	250E	2	Yes	3 (76.2)	15.88 (403)	5.5kV	63kA	–	N/A	–	N/A
A055F2D0R0-300E	300E										
A055F2D0R0-350E	350E										
A055F2D0R0-400E	400E										
A055F2D0R0-450E	450E										

Transformer Protection

Amp-Trap® CS-3 Series and 9F60/9F62 Series

5.5.kV General Purpose fuses – 9F62 Series, EJO-1 – UL Listed

12” (305 mm) Clip Centers - Suitable for use indoors or outdoors





Catalog No.	Amp Rating	No. of Barrels	Indicating	Diameter Inches (mm)	Length Inches (mm)	Max Voltage	Max IR RMS Sym	Fuse Support Indoor (EK-1)	Fuse Support Outdoor (EK0-1)	Fuse Disconnect Indoor (EK-3)	Fuse Disconnect Outdoor (EK0-3)
9F62HCB025	25A	1	Yes	2 (50.8)	14.18 (360)	5.5 kV	50kA	9F61AEG201	9F61CEF209	9F61AEG205	9F61CEF210
9F62HCB030	30A										
9F62HCB040	40A										
9F62HCB050	50A										
9F62HCB065	65A										
9F62DCB080	80A	1	Yes	3 (76.2)	15.88 (403)	5.5 kV	50kA	9F61AEB301	9F61CEF309	9F61AEB305	9F61CEF310
9F62DCB100	100A										
9F62DCB125	125A										
9F62DCB150	150A										
9F62DCB175	175A										
9F62DCB200	200A										
9F62FCB250	250A	2	Yes	3 (76.2)	15.88 (403)	5.5 kV	50kA	9F61AEB401	9F61CEF409	9F61AEB405	9F61CEF410
9F62FCB300	300A										
9F62FCB350	350A										
9F62FCB400	400A										
9F62FCB450	450A										

5.5kV Power Distribution fuses – 9F60 Series, E-Rated EJO-1

12” (305 mm) Clip Centers - Suitable for use indoors or outdoors



Catalog No.	Amp Rating	No. of Barrels	Indicating	Diameter Inches (mm)	Length Inches (mm)	Max Voltage	Max IR RMS Sym	Fuse Support Indoor (EK-1)	Fuse Support Outdoor (EK0-1)	Fuse Disconnect Indoor (EK-3)	Fuse Disconnect Outdoor (EK0-3)
9F60DJD905	0.5E	1	Yes	2 (50.8)	14.18 (360)	5.5 kV	50kA	9F61AEG201	9F61CEF209	9F61AEG205	9F61CEF210
9F60DJD001	1E										
9F60DJD002	2E										
9F60DJD003	3E										
9F60DJD005	5E										
9F60DJD007	7E										
9F60DJD010	10E										
9F60DJD015	15E										
9F60DJD020	20E										
9F60DJD025	25E										
9F60FJD030	30E	1	Yes	3 (76.2)	15.88 (403)	5.5 kV	50kA	9F61AEB301	9F61CEF309	9F61AEB305	9F61CEF310
9F60FJD040	40E										
9F60FJD050	50E										
9F60FJD065	65E										
9F60FJD080	80E										
9F60FJD100	100E										
9F60HJD125	125E	2	Yes	3 (76.2)	15.88 (403)	5.5 kV	50kA	9F61AEB401	9F61CEF409	9F61AEB405	9F61CEF410
9F60HJD150	150E										
9F60HJD200	200E										

Transformer Protection

Amp-Trap® CS-3 Series and 9F60/9F62 Series

8.25kV / 8.3kV Ferrule mounted fuses:

8.25kV E-Rated Amp-Trap CS-3 Series

12” (305 mm) Clip Centers - Suitable for use indoors or in an enclosure only

Catalog No.	Amp Rating	No. of Barrels	Indicating	Diameter Inches (mm)	Length Inches (mm)	Max Voltage	Max IR RMS Sym	Fuse Support Indoor (EK-1)	Fuse Support Outdoor (EK0-1)	Fuse Disconnect Indoor (EK-3)	Fuse Disconnect Outdoor (EK0-3)
A825X10E-1	10E	1	Yes	3 (76.2)	15.88 (403)	8.25kV	50kA	9F61AEG301	N/A	9F61AEG305	N/A
A825X15E-1	15E										
A825X20E-1	20E										
A825X25E-1	25E										
A825X30E-1	30E										
A825X40E-1	40E										
A825X50E-1	50E										
A825X65E-1	65E										
A825X80E-1	80E										
A825X100E-1	100E										
A825X125E-1	125E	2	Yes	3 (76.2)	15.88 (403)	8.25kV	50kA	–	N/A	–	N/A
A825X150E-1	150E										
A825X200E-1	200E										

8.3kV General Purpose fuses – 9F62 Series, EJO-1 – UL Listed

12” (305 mm) Clip Centers - Suitable for use indoors or outdoors

Catalog No.	Amp Rating	No. of Barrels	Indicating	Diameter Inches (mm)	Length Inches (mm)	Max Voltage	Max IR RMS Sym	Fuse Support Indoor (EK-1)	Fuse Support Outdoor (EK0-1)	Fuse Disconnect Indoor (EK-3)	Fuse Disconnect Outdoor (EK0-3)
9F62HCC020	20A	1	Yes	2 (50.8)	14.18 (360)	8.3 kV	50kA	9F61AEG201	9F61CEF209	9F61AEG205	9F61CEF210
9F62HCC025	25A										
9F62HCC030	30A										
9F62HCC040	40A										
9F62HCC050	50A										
9F62DCC065	65A	1	Yes	3 (76.2)	15.88 (403)	8.3 kV	50kA	9F61AEG301	9F61CEF309	9F61AEG305	9F61CEF310
9F62DCC080	80A										
9F62DCC100	100A										
9F62DCC125	125A										
9F62DCC150	150A										
9F62FCC175	175A	2	Yes	3 (76.2)	15.88 (403)	8.3 kV	50kA	9F61AEG401	9F61CEF409	9F61AEG405	9F61CEF410
9F62FCC200	200A										
9F62FCC250	250A										

8.25kV Power Distribution fuses – 9F60 Series, E-Rated EJO-1

12” (305 mm) Clip Centers - Suitable for use indoors or outdoors

Catalog No.	Amp Rating	No. of Barrels	Indicating	Diameter Inches (mm)	Length Inches (mm)	Max Voltage	Max IR RMS Sym	Fuse Support Indoor (EK-1)	Fuse Support Outdoor (EK0-1)	Fuse Disconnect Indoor (EK-3)	Fuse Disconnect Outdoor (EK0-3)
9F60DJE905	0.5E	1	Yes	2 (50.8)	14.18 (360)	8.25 kV	50kA	9F61AEG201	9F61CEF209	9F61AEG205	9F61CEF210
9F60DJE001	1E										
9F60DJE002	2E										
9F60DJE003	3E										
9F60DJE005	5E										
9F60DJE007	7E										
9F60DJE010	10E										
9F60DJE015	15E										
9F60FJE020	20E	1	Yes	3 (76.2)	15.88 (403)	8.25 kV	50kA	9F61AEG301	9F61CEF309	9F61AEG305	9F61CEF310
9F60FJE025	25E										
9F60FJE030	30E										
9F60FJE040	40E										
9F60FJE050	50E										
9F60FJE065	65E										
9F60FJE080	80E										
9F60FJE100	100E										
9F60HJE125	125E	2	Yes	3 (76.2)	15.88 (403)	8.25 kV	50kA	9F61AEG401	9F61CEF409	9F61AEG405	9F61CEF410
9F60HJE150	150E										
9F60HJE200	200E										

For the most current product performance data visit us-ferrazshawmut.mersen.com and use catalog search.

Transformer Protection

Amp-Trap® CS-3 Series and 9F60/9F62 Series

15kV / 15.5kV Ferrule mounted fuses:

15.5kV Power Distribution fuses – 9F60 Series, E-Rated EJ-1

12" (305 mm) Clip Centers - Suitable for use indoors or in an enclosure only

Catalog No.	Amp Rating	No. of Barrels	Indicating	Diameter Inches (mm)	Length Inches (mm)	Max Voltage	Max IR RMS Sym	Fuse Support Indoor (EK-1)	Fuse Support Outdoor (EK0-1)	Fuse Disconnect Indoor (EK-3)	Fuse Disconnect Outdoor (EK0-3)
9F60CJH002	2E	1	Yes	2 (50.8)	14.18 (360)	15.5 kV	50kA*	9F61AEG201	N/A	9F61AEG205	N/A
9F60CJH003	3E										
9F60CJH005	5E										
9F60CJH007	7E										
9F60CJH010	10E										

** These fuses were designed and originally tested at a higher maximum interrupting rating value. Consult factory for further information.*

15.0kV Power Distribution fuses – 9F60 Series, E-Rated EJ-1

14" (356 mm) Clip Centers - Suitable for use indoors or in an enclosure only

Catalog No.	Amp Rating	No. of Barrels	Indicating	Diameter Inches (mm)	Length Inches (mm)	Max Voltage	Max IR RMS Sym	Fuse Support Indoor (EK-1)	Fuse Support Outdoor (EK0-1)	Fuse Disconnect Indoor (EK-3)	Fuse Disconnect Outdoor (EK0-3)
9F60KLH125	125E	2	Yes	4 (101.6)	19.12 (486)	15.0 kV	38kA	9F61AFG501 (13.8kV nominal - 95 kV BIL) 9F61AFJ501 (14.4kV nominal - 110kV BIL)	N/A		
9F60KLH150	150E										
9F60KLH175	175E										

15.5kV Power Distribution fuses – 9F60 Series, E-Rated EJO-1

15" (381 mm) Clip Centers - Suitable for use indoors or outdoors

Catalog No.	Amp Rating	No. of Barrels	Indicating	Diameter Inches (mm)	Length Inches (mm)	Max Voltage	Max IR RMS Sym	Fuse Support Indoor (EK-1)	Fuse Support Outdoor (EK0-1)	Fuse Disconnect Indoor (EK-3)	Fuse Disconnect Outdoor (EK0-3)
9F60DMH905	0.5E	1	Yes	2 (50.8)	17.2 (437)	15.5 kV	50kA*	9F61AGG201 (13.8kV nominal - 95kV BIL) 9F61AGJ201 (14.4kV nominal - 110kV BIL)	9F61CGL209	9F61AGG205 (13.8kV nominal - 95kV BIL) 9F61AGJ205 (14.4kV nominal - 110kV BIL)	9F61CGL210
9F60DMH001	1E										
9F60DMH002	2E										
9F60DMH003	3E										
9F60DMH005	5E										
9F60DMH007	7E										
9F60DMH010	10E										
9F60FMH015	15E	1	Yes	3 (76.2)	18.88 (480)	15.5 kV	50kA	9F61AGG301 (13.8kV nominal - 95kV BIL) 9F61AGJ301 (14.4kV nominal - 110kV BIL)	9F61CGL309	9F61AGG305 (13.8kV nominal - 95kV BIL) 9F61AGJ305 (14.4kV nominal - 110kV BIL)	9F61CGL310
9F60FMH020	20E										
9F60FMH025	25E										
9F60FMH030	30E										
9F60FMH040	40E										
9F60FMH050	50E										
9F60HMH065	65E	2	Yes	3 (76.2)	18.88 (480)	15.5 kV	50kA	9F61AGG401 (13.8kV nominal - 95kV BIL) 9F61AGJ401 (14.4kV nominal - 110kV BIL)	9F61CGL409	9F61AGG405 (13.8kV nominal - 95kV BIL) 9F61AGJ405 (14.4kV nominal - 110kV BIL)	9F61CGL410
9F60HMH080	80E										
9F60HMH100	100E										

** These fuses were designed and originally tested at a higher maximum interrupting rating value. Consult factory for further information.*

Transformer Protection

Amp-Trap® CS-3 Series and 9F60/9F62 Series

15.5kV General Purpose fuses – 9F62 Series, EJO-1 – UL Listed
15” (381 mm) Clip Centers - Suitable for use indoors or outdoors

Catalog No.	Amp Rating	No. of Barrels	Indicating	Diameter Inches (mm)	Length Inches (mm)	Max Voltage	Max IR RMS Sym	Fuse Support Indoor (EK-1)	Fuse Support Outdoor (EK0-1)	Fuse Disconnect Indoor (EK-3)	Fuse Disconnect Outdoor (EK0-3)
9F62HDD020	20A	1	Yes	2 (50.8)	17.2 (437)	15.5 kV	50kA	9F61AGG201 (13.8kV nominal - 95kV BIL) 9F61AGJ201 (14.4kV nominal - 110kV BIL)	9F61CGL209	9F61AGG205 (13.8kV nominal - 95kV BIL) 9F61AGJ205 (14.4kV nominal - 110kV BIL)	9F61CGL210
9F62HDD025	25A										
9F62HDD030	30A										
9F62DDD050	50A	1	Yes	3 (76.2)	18.88 (480)	15.5 kV	50kA	9F61AGG301 (13.8kV nominal - 95kV BIL) 9F61AGJ301 (14.4kV nominal - 110kV BIL)	9F61CGL309	9F61AGG305 (13.8kV nominal - 95kV BIL) 9F61AGJ305 (14.4kV nominal - 110kV BIL)	9F61CGL310
9F62DDD065	65A										
9F62DDD080	80A										
9F62DDD100	100A										
9F62FDD125	125A	2	Yes	3 (76.2)	18.88 (480)	15.5 kV	50kA	9F61AGG401 (13.8kV nominal - 95kV BIL) 9F61AGJ401 (14.4kV nominal - 110kV BIL)	9F61CGL409	9F61AGG405 (13.8kV nominal - 95kV BIL) 9F61AGJ405 (14.4kV nominal - 110kV BIL)	9F61CGL410
9F62FDD150	150A										
9F62FDD175	175A										
9F62FDD200	200A										

15.5kV E-Rated Amp-Trap CS-3 series – UL Listed
15” (381 mm) Clip Centers - Suitable for use indoors or in an enclosure only

Catalog No.	Amp Rating	No. of Barrels	Indicating	Diameter Inches (mm)	Length Inches (mm)	Max Voltage	Max IR RMS Sym	Fuse Support Indoor (EK-1)	Fuse Support Outdoor (EK0-1)	Fuse Disconnect Indoor (EK-3)	Fuse Disconnect Outdoor (EK0-3)
A155F1C0R0-5E	5E	1	Yes	2 (50.8)	17.03 (433)	15.5kV	50kA	9F61AGG201 (13.8kV nominal - 95kV BIL) 9F61AGJ201 (14.4kV nominal - 110kV BIL)	N/A	9F61AGG205 (13.8kV nominal - 95kV BIL) 9F61AGJ205 (14.4kV nominal - 110kV BIL)	N/A
A155F1C0R0-7E	7E										
A155F1C0R0-10E	10E										
A155F1C0R0-15E	15E										
A155F1C0R0-20E	20E										
A155F1C0R0-25E	25E										
A155F1C0R0-30E	30E										
A155F1D0R0-10E	10E	1	Yes	3 (76.2)	18.87 (479)	15.5kV	50kA	9F61AGG301 (13.8kV nominal - 95kV BIL) 9F61AGJ301 (14.4kV nominal - 110kV BIL)	N/A	9F61AGG305 (13.8kV nominal - 95kV BIL) 9F61AGJ305 (14.4kV nominal - 110kV BIL)	N/A
A155F1D0R0-15E	15E										
A155F1D0R0-20E	20E										
A155F1D0R0-25E	25E										
A155F1D0R0-30E	30E										
A155F1D0R0-40E	40E										
A155F1D0R0-50E	50E										
A155F2D0R0-65E	65E	2	Yes	3 (76.2)	18.87 (479)	15.5kV	50kA	–	N/A	–	N/A
A155F2D0R0-80E	80E										
A155F2D0R0-100E	100E										

15.5kV E-Rated Amp-Trap CS-3 series – UL Listed
18” (457 mm) Clip Centers - Suitable for use indoors or in an enclosure only

Catalog No.	Amp Rating	No. of Barrels	Indicating	Diameter Inches (mm)	Length Inches (mm)	Max Voltage	Max IR RMS Sym	Fuse Support Indoor (EK-1)	Fuse Support Outdoor (EK0-1)	Fuse Disconnect Indoor (EK-3)	Fuse Disconnect Outdoor (EK0-3)
A155F1D0R0-65E	65E	1	Yes	3 (76.2)	21.75 (552)	15.5kV	50kA	–	N/A	–	N/A
A155F1D0R0-80E	80E										
A155F1D0R0-100E	100E										
A155F2D0R0-125E	125E	2	Yes	3 (76.2)	21.75 (552)	15.5kV	50kA	–	N/A	–	N/A
A155F2D0R0-150E	150E										
A155F2D0R0-175E	175E										
A155F2D0R0-200E	200E										

Transformer Protection

Amp-Trap® CS-3 Series and 9F60/9F62 Series

25.8kV Ferrule mounted fuses:

25.8kV Power Distribution fuses – 9F60 Series, E-Rated EJ-1

15” (381 mm) Clip Centers - Suitable for use indoors or in an enclosure only

Catalog No.	Amp Rating	No. of Barrels	Indicating	Diameter Inches (mm)	Length Inches (mm)	Max Voltage	Max IR RMS Sym	Fuse Support Indoor (EK-1)	Fuse Support Outdoor (EK0-1)	Fuse Disconnect Indoor (EK-3)	Fuse Disconnect Outdoor (EK0-3)
9F60CMJ905	0.5E										
9F60CMJ001	1E	1	Yes	2 (50.8)	17.20 (437)	25.8 kV	35kA*	–	N/A	–	N/A
9F60CMJ002	2E										

** These fuses were designed and originally tested at a higher maximum interrupting rating value. Consult factory for further information.*

25.8kV Power Distribution fuses – 9F60 Series, E-Rated EJO-1

21” (533 mm) Clip Centers - Suitable for use indoors or outdoors



Catalog No.	Amp Rating	No. of Barrels	Indicating	Diameter Inches (mm)	Length Inches (mm)	Max Voltage	Max IR RMS Sym	Fuse Support Indoor (EK-1)	Fuse Support Outdoor (EK0-1)	Fuse Disconnect Indoor (EK-3)	Fuse Disconnect Outdoor (EK0-3)
9F60DNJ905	0.5E										
9F60DNJ001	1E										
9F60DNJ002	2E										
9F60DNJ003	3E	1	Yes	2 (50.8)	23.18 (589)	25.8 kV	35kA*	9F61AHM201	9F61CHM209	9F61AHM205	9F61CHM210
9F60DNJ005	5E										
9F60DNJ007	7E										
9F60DNJ010	10E										
9F60FNJ015	15E										
9F60FNJ020	20E										
9F60FNJ025	25E										
9F60FNJ030	30E	1	Yes	3 (76.2)	24.81 (630)	25.8 kV	25kA	9F61AHM301	9F61CHM309	9F61AHM305	9F61CHM310
9F60FNJ040	40E										
9F60FNJ050	50E										
9F60HNJ065	65E										
9F60HNJ080	80E	2	Yes	3 (76.2)	24.81 (630)	25.8 kV	25kA	9F61AHM401	9F61CHM409	9F61AHM405	9F61CHM410
9F60HNJ100	100E										

Transformer Protection

Amp-Trap® CS-3 Series and 9F60/9F62 Series

38kV Ferrule mounted fuses:

38kV Power Distribution fuses – 9F60 Series, E-Rated EJO-1

27” (686 mm) Clip Centers - Suitable for use indoors or outdoors



Catalog No.	Amp Rating	No. of Barrels	Indicating	Diameter Inches (mm)	Length Inches (mm)	Max Voltage	Max IR RMS Sym	Fuse Support Indoor (EK-1)	Fuse Support Outdoor (EK0-1)	Fuse Disconnect Indoor (EK-3)	Fuse Disconnect Outdoor (EK0-3)
9F60FPK001	1E	1	Yes	3 (76.2)	30.81 (783)	38 kV	26kA*	–	9F61CJN309	–	9F61CJN310
9F60FPK002	2E										
9F60FPK003	3E										
9F60FPK005	5E										
9F60FPK007	7E										
9F60FPK010	10E										
9F60FPK015	15E	1	Yes	3 (76.2)	30.81 (783)	38 kV	13kA	–	9F61CJN309	–	9F61CJN310
9F60FPK020	20E										
9F60FPK025	25E										
9F60FPK030	30E										
9F60FPK040	40E										
9F60HPK050	50E	2	Yes	3 (76.2)	30.81 (783)	38 kV	13kA	–	9F61CJN409	–	9F61CJN410
9F60HPK065	65E										
9F60HPK080	80E										
9F60FPT001	1E	1	No	3 (76.2)	30.81 (783)	38 kV	26kA*	–	9F61CJN309	–	9F61CJN310
9F60FPT002	2E										
9F60FPT003	3E										
9F60FPT005	5E										
9F60FPT007	7E										
9F60FPT010	10E										
9F60FPT015	15E	1	No	3 (76.2)	30.81 (783)	38 kV	13kA	–	9F61CJN309	–	9F61CJN310
9F60FPT020	20E										
9F60FPT025	25E										
9F60FPT030	30E										
9F60FPT040	40E										
9F60HPT050	50E	2	No	3 (76.2)	30.81 (783)	38 kV	13kA	–	9F61CJN409	–	9F61CJN410
9F60HPT065	65E										
9F60HPT080	80E										

** These fuses were designed and originally tested at a higher maximum interrupting rating value. Consult factory for further information.*

Transformer Protection

Amp-Trap® and 9F62 Bolt-In Series

5.0kV, 5.5kV, 7.2kV, 8.25kV, and 15.5kV Bolt-In fuses:

Mersen fuses for the protection of transformers and distribution lines deliver overload and short circuit protection. These current-limiting fuses will melt at current that can be as low as 1.7 times the fuse current ratings up to its maximum interrupting rating. These fuses are designed to withstand the transformer magnetizing inrush current. They are single, double, triple or quadruple barrels 3 inch diameter (size D) with end mounts designed for bolting directly to equipment bus or terminal pads.

Features/Benefits:

- UL listed for compatibility with UL listed equipment.
- Bolt-In mounting for direct connection to bus or terminals.
- Current-limiting for superior equipment protection.
- Non-venting for silent operation
- Metal embossed catalog number and manufacturing date for lasting identification.
- Outdoor usage for the 9F62.
- Blown-fuse indicator to give positive identification of open fuse.
  - Amp trap: 2 lb tripped force - 0.50 Inch
  - 9F62: 0.125 lb tripped force – 0.20 Inch

Highlights:

- E-Rated
- UL listed
- Outdoor use

Applications:

- Protection for 5.5kV to 15.5kV transformers or distribution systems.

Definitions:

General Purpose Current-Limiting Fuses (Per IEEE Std C37.40-2003):
A general purpose current-limiting fuse is one that is capable of interrupting all currents from its rated interrupting current down to the current that causes melting of the fusible element(s) in one hour or more.

E-Rating: E-Rated fuses are general purpose fuses that operate as follows (Per ANSI C37.46-2000):

- 100E or less – must melt in 300 seconds (5 mins.) at 200 to 240% of E (ampere) rating.
- Over 100E – must melt in 600 seconds (10 mins.) at 220 to 264% of E (ampere) rating.
- Example: A 100E fuse must melt in 300 seconds with an applied current of 200 to 240 amperes.



Ratings:

Amp-Trap Bolt-in Series

A050B:
Volts : 5.0kV AC
Amps : 1200E
IR : 59kA Sym

A055B:
Volts : 5.5kV AC
Amps : 10 to 900E
IR : 59kA Sym

A072B:
Volts : 7.2kV AC
Amps : 250 to 400E
IR : 65kA Sym

A083B:
Volts : 8.25kV AC
Amps : 125 to 200E
IR : 50kA Sym

A155B:
Volts : 15.5kV AC
Amps : 200 to 300E
IR : 50kA Sym

9F62 Series Type EJO-1

9F62
Volts : 5.5kV AC
: 15.5V AC
Amps : 300 to 900A
IR : 50kA Sym

Approvals:

- UL Listed to standard File E143362

Transformer Protection

Amp-Trap® and 9F62 Bolt-In Series

5.0kV / 5.5kV Bolt-In fuses:

5.0kV E-Rated Amp-Trap Bolt-In Series

Suitable for use indoors or in an enclosure only

Catalog No.	Amp Rating	No. of Barrels	Indicating	Max Voltage	Max IR RMS Sym	Figure
A050B4D0R0-1200E	1200E	4	Yes	5.0kV	59kA	E

Figure E

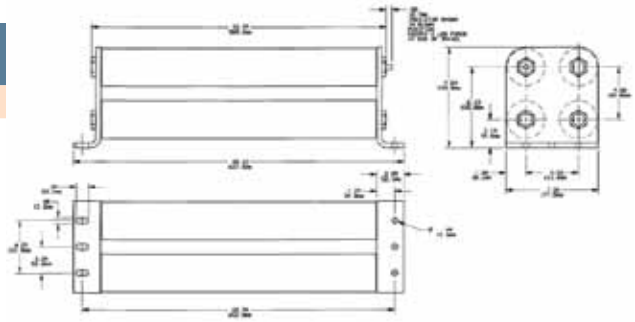

5.5kV E-Rated Amp-Trap Bolt-In Series – UL Listed

Suitable for use indoors or in an enclosure only

Catalog Number	Amp Rating	No. of Barrels	Indicating	Max Voltage	Max IR RMS Sym	Figure
A055B1DAR0-10E	10E	1	Yes	5.5kV	63kA	A
A055B1DAR0-15E	15E					
A055B1DAR0-20E	20E					
A055B1DAR0-25E	25E					
A055B1DAR0-30E	30E					
A055B1DAR0-40E	40E					
A055B1DAR0-50E	50E					
A055B1DAR0-65E	65E					
A055B1DAR0-80E	80E					
A055B1DAR0-100E	100E					
A055B1DAR0-125E	125E					
A055B1DAR0-150E	150E					
A055B1DAR0-175E	175E					
A055B1DAR0-200E	200E					
A055B2DAR0-250E	250E	2	Yes	5.5kV	63kA	B
A055B2DAR0-300E	300E					
A055B2DAR0-350E	350E					
A055B2DAR0-400E	400E					
A055B2DAR0-450E	450E					
A055B2D0R0-450E	450E	2	Yes	5.5kV	63kA	C
A055B2D0R0-500E	500E					
A055B2D0R0-600E	600E					
A055B3D0R0-750E	750E	3	Yes	5.5kV	63kA	D
A055B3D0R0-900E	900E					

Figure A

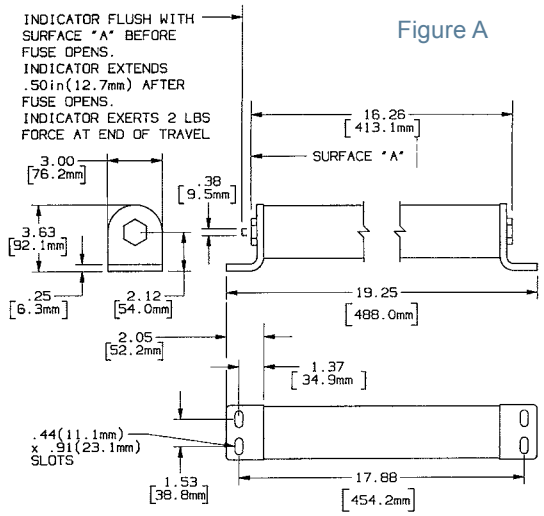

Figure B

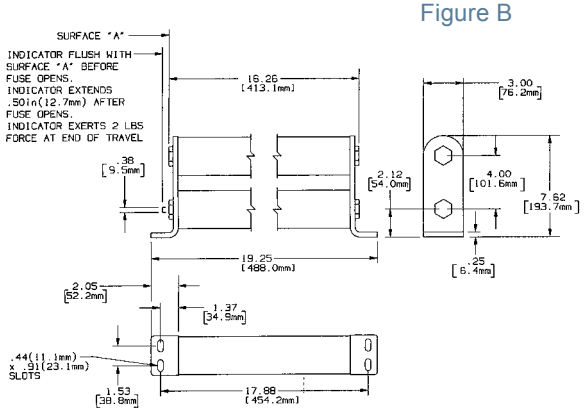

E

Transformer Protection

Amp-Trap® and 9F62 Bolt-In Series

5.5kV General Purpose fuses – 9F62 Series, EJO-1 – UL Listed

Suitable for use indoors or outdoors

Catalog No.	Amp Rating	No. of Barrels	Indicating	Max Voltage	Max IR RMS Sym	Figure	Fuse Support Indoor (EK-1)	Fuse Support Outdoor (EK0-1)
9F62KCB500	500A	4	Yes	5.5 kV	50kA	F	9F61AKB001	9F61CKF009
9F62KCB600	600A							
9F62KCB700	700A							
9F62KCB800	800A							
9F62KCB900	900A							

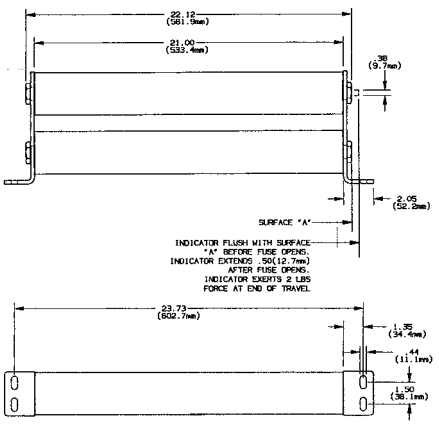

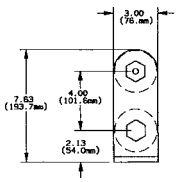

Figure C

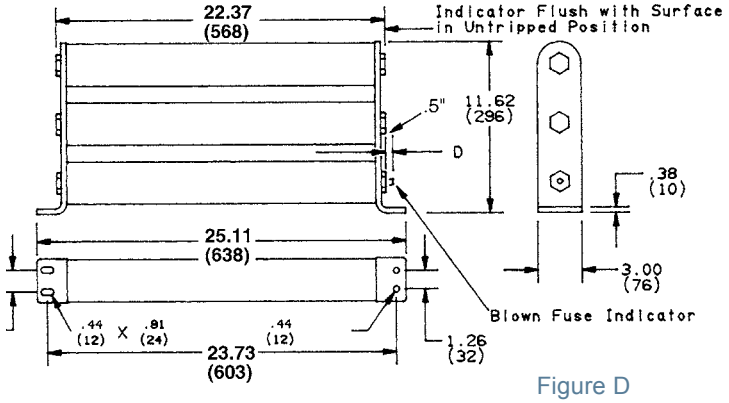

Figure D

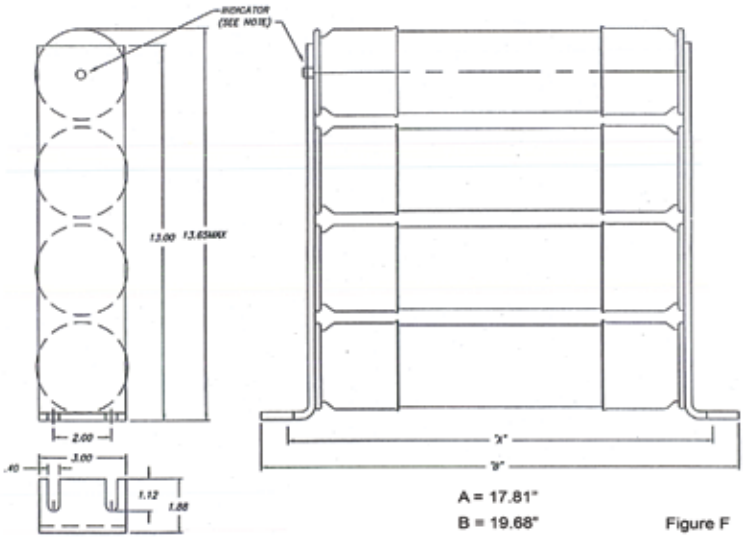

Figure F

Figure F

Transformer Protection

Amp-Trap® and 9F62 Bolt-In Series

7.2kV / 8.25kV / 15.5kV Bolt-in fuses:

7.2kV E-Rated Amp-Trap Bolt-In Series

Suitable for use indoors or in an enclosure only

Catalog No.	Amp Rating	No. of Barrels	Indicating	Max Voltage	Max IR RMS Sym	Figure
A072B2D0R0-250E	250E	2	Yes	7.9kV	65kA	G
A072B2D0R0-300E	300E					
A072B2D0R0-350E	350E					
A072B2D0R0-400E	400E					

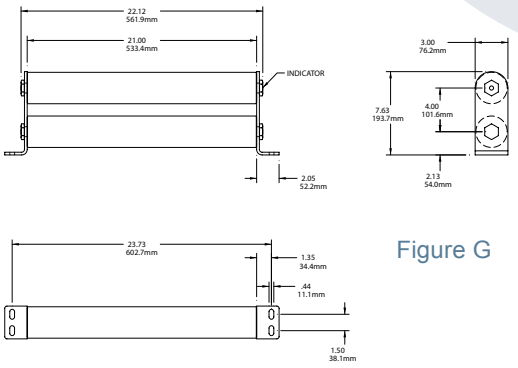

Figure G

8.25kV E-Rated Amp-Trap Bolt-In Series

Suitable for use indoors or in an enclosure only

Catalog No.	Amp Rating	No. of Barrels	Indicating	Max Voltage	Max IR RMS Sym	Figure
A083B2DAR0-125E	125E	2	Yes	8.25kV	50kA	H
A083B2DAR0-150E	150E					
A083B2DAR0-175E	175E					
A083B2DAR0-200E	200E					

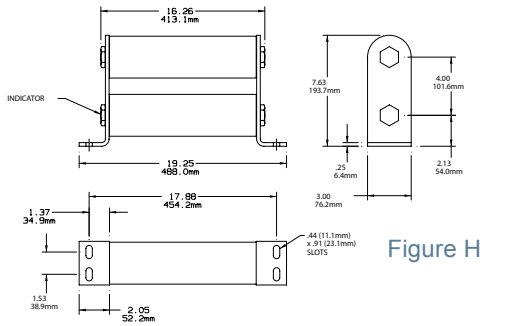

Figure H

15. 5kV E-Rated Amp-Trap Bolt-In Series

Suitable for use indoors or in an enclosure only

Catalog No.	Amp Rating	No. of Barrels	Indicating	Max Voltage	Max IR RMS Sym	Figure
A155B2D0R0-200E	200E	2	Yes	15.5kV	50kA	J
A155B3D0R0-300E	300E	3	Yes	15.5kV	50kA	K

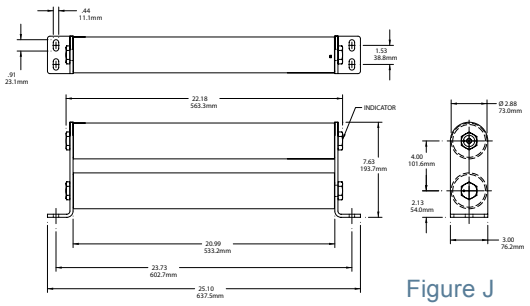

Figure J

15.5kV General Purpose fuses – 9F62 Series, EJO-1 – UL Listed

Suitable for use indoors or outdoors

Catalog No.	Amp Rating	No. of Barrels	Indicating	Max Voltage	Max IR RMS Sym	Figure	Fuse Support Indoor (EK-1)	Fuse Support Outdoor (EK0-1)
9F62KED300	300A	4	Yes	15.5 kV	50kA	L	9F61AHG001	9F61CHL009

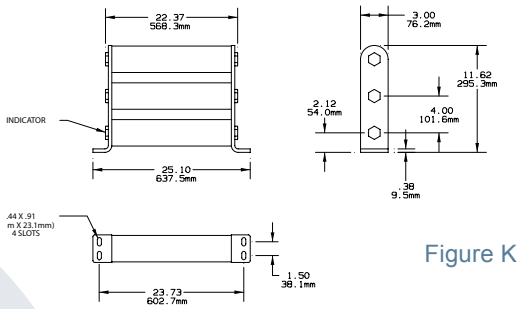

Figure K

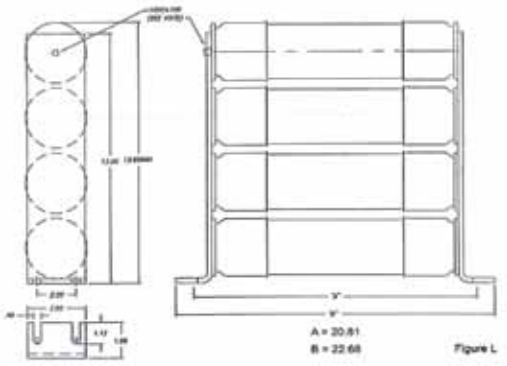

Figure L

For the most current product performance data visit us-ferrazshawmut.mersen.com and use catalog search.

Transformer Protection

Amp-Trap® CL-14 Series

5.5kV, 8.25kV, and 15.5kV Clip-lock mounted fuses:

Mersen Amp-Trap fuses for the protection of transformers and distribution lines deliver overload and short circuit protection. These general purpose current-limiting fuses will melt at current that can be as low as 1.7 times the fuse current ratings up to its maximum interrupting rating. These fuses are designed to withstand the transformer magnetizing inrush current. They are single, double or triple barrels 3 inch diameter (size D) and mount in unique cam-locking clips for superior connections as well as easy installation and replacement.

Features/Benefits:

- UL listed for compatibility with UL listed equipment.
- Clip-lock mounting for reliable high integrity connection into circuit.
- Current-limiting for superior equipment protection.
- Non-venting for silent operation
- Metal embossed catalog number and manufacturing date for lasting identification.
- Blown-fuse indicator to give positive identification of open fuse.
  - 2 lb tripped force - 0.50 Inch

Highlights:

- E-Rated
- UL listed

Applications:

- Protection for 5.5kV to 15.5kV transformers or distribution systems.

Definitions:

General Purpose Current-Limiting Fuses (Per IEEE Std C37.40-2003):
A general purpose current-limiting fuse is one that is capable of interrupting all currents from its rated interrupting current down to the current that causes melting of the fusible element(s) in one hour or more.

E-Rating: E-Rated fuses are general purpose fuses that operate as follows (Per ANSI C37.46-2000):

- 100E or less – must melt in 300 seconds (5 mins.) at 200 to 240% of E (ampere) rating.
- Over 100E – must melt in 600 seconds (10 mins.) at 220 to 264% of E (ampere) rating.
- Example: A 100E fuse must melt in 300 seconds with an applied current of 200 to 240 amperes.



Ratings:

Amp-Trap CL-14 Series
(Indoor or outdoors in a weatherproof enclosure)

A055C
Volts : 5.5kV AC
Amps : 10 to 600E
IR : 63kA Sym

A083C:
Volts : 8.25kV AC
Amps : 60 to 200E
IR : 50kA Sym

A155C
Volts : 15.5kV AC
Amps : 10 to 300E
IR : 50kA Sym

Approvals:

- UL Listed to standard File E143362

UL LISTED

Transformer Protection
Amp-Trap® CL-14 Series

Clip-lock clips for CL-14 fuses:

228-700-520 (One pair of clips)

The clip lock design provides a reliable, high-pressure contact. Mersen CL-14 fuses have copper tabs which slide into position between the clip casting and cam. When the cam is locked by moving the pull ring, a high-pressure contact is made between the clip casting and fuse tab. Each clip includes two .44” diameter counter-sunk holes on 2” centers and two flat head socket screws (3/8-16 UNRC, recommended torque 200 pound-inches) for mounting the clip on standard NEMA insulators. Order catalog number 228-700-520 (for one pair of fuse clips, enough for one fuse).

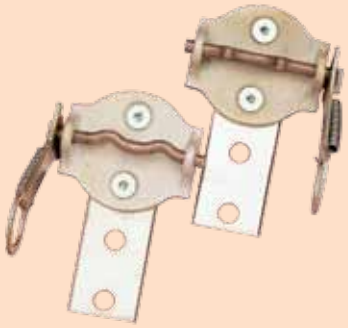

Catalog Numbers, Dimensions

CL-14 Fuse Catalog No.	A Dimensions - Inches
A055C1DORO-(10E-150E)	13.25
A055C1DORO-(200E-400E)	19.25
A055C2DORO-(450E-600E)	19.25
A155C1DORO-(10E-50E)	16.25
A155C1DORO-(65E-100E)	19.25
A155C2DORO-(125E)	19.25
A155C3DORO-(150E-300E)	19.25

Mounting Details for Clip Lock Cat. No. 228-700-520

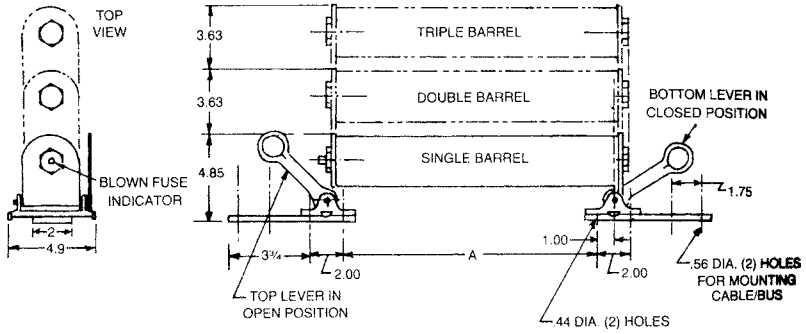

E

Transformer Protection

Amp-Trap® CL-14 Series

5.5kV / 8.25kV Clip-lock mounted fuses:

5.5kV E-Rated Amp-Trap CL-14 Series

15.25 (388mm) Clip Centers (dimension E). Suitable for use indoors or in an enclosure only

Catalog No.	Amp Rating	No. of Barrels	Indicating	Max Voltage	Max IR RMS Sym	Figure	Dimensions Inches (mm) A	B	C	E
A055C1D0R0-10E	10E	1	Yes	5.5kV	63kA	A	16.81 (427)	16.12 (410)	0.5 (13) Tripped Force 2 lbs.	15.25 (388)
A055C1D0R0-15E	15E									
A055C1D0R0-20E	20E									
A055C1D0R0-25E	25E									
A055C1D0R0-30E	30E									
A055C1D0R0-40E	40E									
A055C1D0R0-50E	50E									
A055C1D0R0-65E	65E									
A055C1D0R0-80E	80E									
A055C1D0R0-100E	100E									
A055C1D0R0-125E	125E									
A055C1D0R0-150E	150E									

5.5kV E-Rated Amp-Trap CL-14 Series

21.25 (540mm) Clip Centers (dimension E). Suitable for use indoors or in an enclosure only

Catalog No.	Amp Rating	No. of Barrels	Indicating	Max Voltage	Max IR RMS Sym	Figure	Dimensions Inches (mm) A	B	C	E
A055C1D0R0-200E	200E	1	Yes	5.5kV	63kA	A	22.81 (580)	22.12 (562)	0.5 (13) Tripped Force 2 lbs.	21.25 (540)
A055C1D0R0-250E	250E									
A055C1D0R0-300E	300E									
A055C1D0R0-400E	400E									
A055C2D0R0-450E	450E	2	Yes	5.5kV	63kA	B	22.81 (580)	22.12 (562)	0.5 (13) Tripped Force 2 lbs.	21.25 (540)
A055C2D0R0-500E	500E									
A055C2D0R0-600E	600E									

Figure A

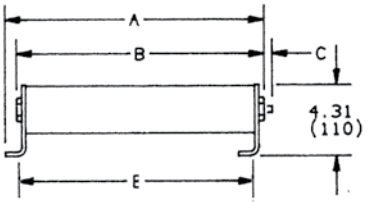

Figure B

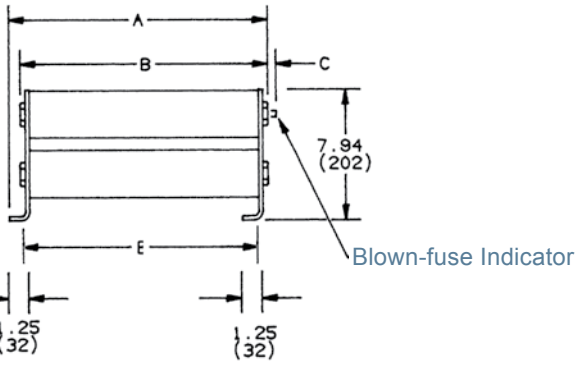

Transformer Protection

Amp-Trap® CL-14 Series

8.25kV E-Rated Amp-Trap CL-14 Series

15.70 (399mm) and 15.39 (391mm) Clip Centers (dimension E). Suitable for use indoors or in an enclosure only

Catalog No.	Amp Rating	No. of Barrels	Indicating	Max Voltage	Max IR RMS Sym	Figure	Dimensions Inches (mm)			
							A	B	C	E
A083C1D0R0-60E	60E	1	Yes	8.25kV	50kA	A	16.95 (431)	16.26 (413)	0.5 (13) Tripped Force 2 lbs.	15.39 (391)
A083C2D0R0-200E	200E	2	Yes	8.25kV	50kA	B	16.95 (431)	16.26 (413)	0.5 (13) Tripped Force 2 lbs.	15.39 (391)

Figure A

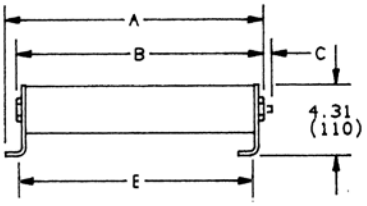

Figure B

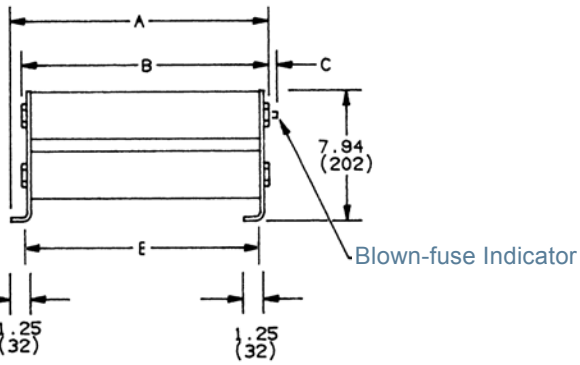

E

Transformer Protection

Amp-Trap® CL-14 Series

15.5kV Clip-lock mounted fuses:

15.5kV E-Rated Amp-Trap CL-14 Series

18.25 (464mm) Clip Centers (dimension E). Suitable for use indoors or in an enclosure only

Catalog No.	Amp Rating	No. of Barrels	Indicating	Max Voltage	Max IR RMS Sym	Figure	Dimensions Inches (mm) A	B	C	E
A155C1D0R0-10E	10E	1	Yes	15.5kV	50kA	A	19.81 (504)	19.12 (486)	0.5 (13) Tripped Force 2 lbs.	18.25 (464)
A155C1D0R0-15E	15E									
A155C1D0R0-20E	20E									
A155C1D0R0-25E	25E									
A155C1D0R0-30E	30E									
A155C1D0R0-40E	40E									
A155C1D0R0-50E	50E									

15.5kV E-Rated Amp-Trap CL-14 Series

21.25 (540mm) Clip Centers (dimension E). Suitable for use indoors or in an enclosure only

Catalog No.	Amp Rating	No. of Barrels	Indicating	Max Voltage	Max IR RMS Sym	Figure	Dimensions Inches (mm) A	B	C	E
A155C1D0R0-65E	65E	1	Yes	15.5kV	50kA	A	22.81 (580)	22.12 (562)	0.5 (13) Tripped Force 2 lbs.	21.25 (540)
A155C1D0R0-80E	80E									
A155C1D0R0-100E	100E									
A155C2D0R0-125E	125E	2	Yes	15.5kV	50kA	B	22.81 (580)	22.12 (562)	0.5 (13) Tripped Force 2 lbs.	21.25 (540)
A155C2D0R0-150E	150E									
A155C2D0R0-200E	200E									
A155C3D0R0-150E	150E	3	Yes	15.5kV	50kA	C	22.81 (580)	22.12 (562)	0.5 (13) Tripped Force 2 lbs.	21.25 (540)
A155C3D0R0-200E	200E									
A155C3D0R0-250E	250E									
A155C3D0R0-300E	300E									

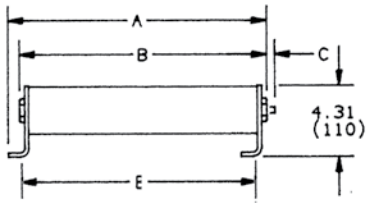

Figure A

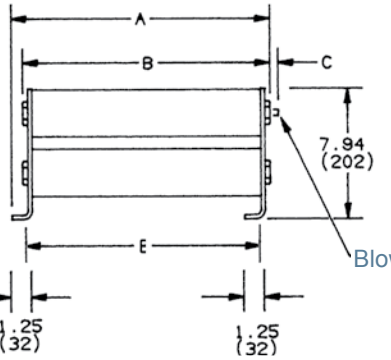

Figure B

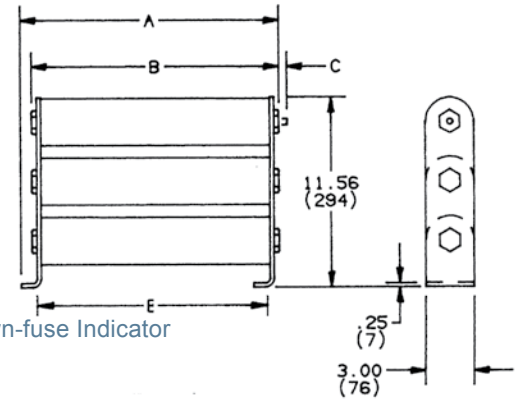

Figure C

Motor Protection
Amp-Trap® and 9F60 Series

2.4kV, 2.54kV, 4.8kV, 5.08kV and 7.2kV Ferrule mounted fuses:

Mersen R-Rated fuses are current-limiting, high interrupting rating fuses intended for the short circuit protection of medium voltage motors and motor controllers. R-Rated fuses are back-up fuses that have a minimum interrupting rating, and must be coordinated with overload relays in combination motor starters. The motor starter manufacturer generally specifies the R-Rated fuse size. These fuses come with a 3 (size D) or 4 (size E) inch diameter barrels with ferrules and are mounted in spring reinforced clips.

Features/Benefits:

- The Amp-Trap and 9F60 R-Rated fuses are UL Recognized.
- Ferrule mounting for standard clips and interchangeability with other brands of fuses.
- Current-limiting for superior equipment protection.
- Metal embossed catalog number and manufacturing date for lasting identification.
- Hookeye for non load-break isolation by hookstick
  - On the 4.8kV an optional hookeye mounted in the factory is available.
  - On all other 3" barrel if a hookeye is required, use the operating eye 9F61AAW612. (See page E58)
- Blown-fuse indicator to give positive identification of open fuse.
  - Amp trap: 3" Barrel 2 lb tripped force - 0.50 Inch
  - 9F60: 0.125 lb tripped force – 0.20 Inch

Highlights:

- R-Rated
- UL recognized

Applications:

- Short circuit protection of medium voltage motors and motor controllers.

Definitions:

R-Rating: R-Rated fuses are back-up fuses that operate as follows (Per ANSI C37.46-2000): An R-Rated fuse will melt in the range of 15 to 35 seconds at a value of current equal to 100 times the "R" rating.

Back-up Current-Limiting Fuses: A back-up current-limiting fuse is a fuse that can interrupt any current between its rated minimum interrupting current and its maximum interrupting current. Back-up fuses are not designed or intended to open under overload conditions.

Continuous Ampere Rating at 40°C: The continuous amp rating defines the thermal capability of the fuse per ANSI C37.46 and should not be the sole factor in fuse selection.



E

Ratings:

Amp-Trap
A240R
Volts : 2.4kV AC
Amps : 1 to 36R
IR : 65kA Sym
A480R
Volts : 4.8kV AC
Amps : 2 to 36R
IR : 50kA Sym
A072F
Volts : 7.2kV AC
Amps : 2 to 24R
IR : 50kA Sym

9F60 SERIES TYPE EJ-2
9F60
Volts : 2.54kV AC
: 5.08kV ac
Amps : 2 to 36R
IR : 50kA Sym

Approvals:

- Amp-Trap: UL File E93367
- 9F60: UL File E191980

Motor Protection
Amp-Trap® and 9F60 Series

2.4kV R-Rated Amp-Trap Series

7.5” (191 mm) Clip Centers – Barrel diameter size D (3”)

Catalog No.	Size	Continuous Amp rating at 40°C	Minimum Interrupting Rating RMS Amp	No of Barrels	Fig.	Indicating	Dimension L Inches (mm)	1 Phase interrupting rating	
								UL Component Recognition Max IR RMS Sym	Max Voltage Tested Max IR RMS Sym
A240R1R	1R	35	100	1	A	Yes	10.88 276)	65kA at 2.6kV	65kA at 2.6kV
A240R2R	2R	70	170						
A240R3R	3R	100	250						
A240R4R	4R	130	340						
A240R5R	5R	150	420						
A240R6R	6R	170	500						
A240R9R	9R	200	760						
A240R12R	12R	230	1000						
A240R18R	18R	390	1500	2	B				
A240R24R	24R	450	2000						
A240R36R	36R**	650	2900	3	C				

** Not recommended for use in fuse clips which grasp only one barrel.

2.4kV / 2.54kV Ferrule mounted fuses:

Indicator Flush with Surface

2 Lb. Force (Tripped)

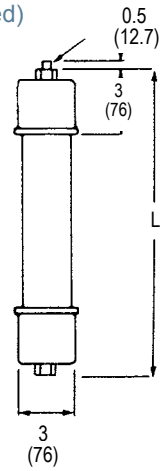

Figure A

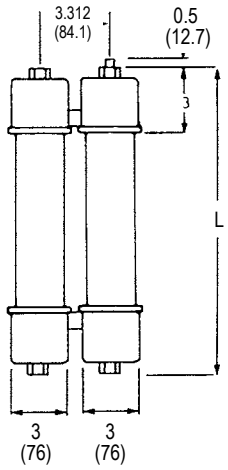

Figure B

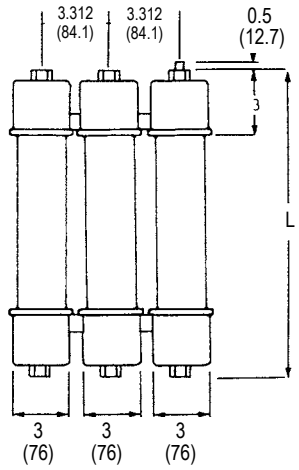

Figure C

Motor Protection

Amp-Trap® and 9F60 Series

2.4kV R-Rated 9F60 EJ-2 Series

7” (179 mm) Clip Centers – Barrel diameter size D (3”)

Catalog No.	Size	Continuous Amp rating at 40°C	Minimum Interrupting Rating RMS Amp	No of Barrels	Fig.	Indicating	Dimension L Inches (mm)	1 Phase interrupting rating	
								UL Component Recognition Max IR RMS Sym	Max Voltage Tested Max IR RMS Sym
9F60LCB502	2R	70	195	1	D	Yes	10.88 276)	50kA at 2.54kV	50kA at 2.54kV
9F60LCB503	3R	100	270						
9F60LCB504	4R	130	370						
9F60LCB506	6R	170	580						
9F60LCB509	9R	200	820						
9F60LCB512	12R	230	1150						
9F60MCB518	18R	390	1800	2	E				
9F60MCB524	24R	450	2400						
9F60LCL302	2R	70	195	1	D	No	10.88 (276)	50kA at 2.54kV	50kA at 2.54kV
9F60LCL303	3R	100	270						
9F60LCL304	4R	130	370						
9F60LCL306	6R	170	580						
9F60LCL309	9R	200	820						
9F60LCL312	12R	230	1150						
9F60MCL318	18R	390	1800	2	E				
9F60MCL324	24R	450	2400						

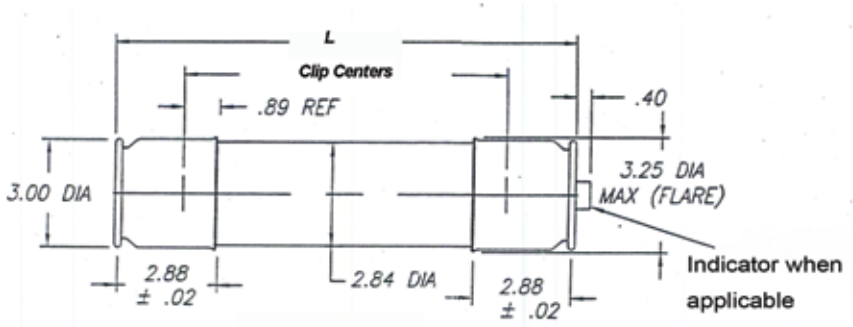

Fig. D

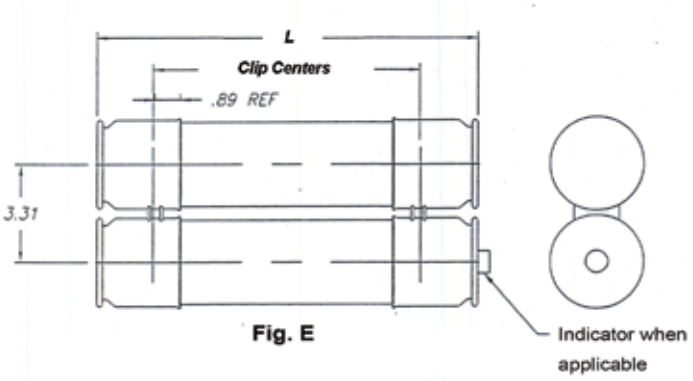

Fig. E

Motor Protection
Amp-Trap® and 9F60 Series

4.8kV / 5.08kV Ferrule Mounted Fuses:

4.8kV R-Rated Amp-Trap Series
12.5" (317 mm) Clip Centers – Barrel diameter size D (3")

Catalog No.	Size	Continuous Amp rating at 40°C	Minimum Interrupting Rating RMS Amp	No of Barrels	Fig.	Indicating	Dimension L Inches (mm)	1 Phase interrupting rating	
								UL Component Recognition Max IR RMS Sym	Max Voltage Tested Max IR RMS Sym
A480R2R-1	2R	70	190	1	A	Yes	15.88 (403)	64kA at 5.5kV	64kA at 5.5kV
A480R3R-1	3R	100	225						
A480R4R-1	4R	130	330						
A480R5R-1	5R	150	400						
A480R6R-1	6R	170	500						
A480R9R-1	9R	200	740						
A480R12R-1	12R	230	955						
A480R18R-1	18R	390	1440	2	B				
A480R24R-1	24R	450	1910						
A480R36R-1	36R**	650	2810	3	C				

4.8kV R-Rated Amp-Trap Series with Hookeye
12.75" (324 mm) Clip Centers – Barrel diameter size D (3")

Catalog No.	Size	Continuous Amp rating at 40°C	Minimum Interrupting Rating RMS Amp	No of Barrels	Fig.	Indicating	Dimension L Inches (mm)	1 Phase interrupting rating	
								UL Component Recognition Max IR RMS Sym	Max Voltage Tested Max IR RMS Sym
A480R2R-1HE	2R	70	190	1	A	Yes	16.13 (410)	50kA at 5.08kV	63kA at 5.5kV
A480R3R-1HE	3R	100	225						
A480R4R-1HE	4R	130	330						
A480R5R-1HE	5R	150	400						
A480R6R-1HE	6R	170	500						
A480R9R-1HE	9R	200	740						
A480R12R-1HE	12R	230	955						
A480R18R-1HE	18R	390	1440	2	B				
A480R24R-1HE	24R	450	1910						

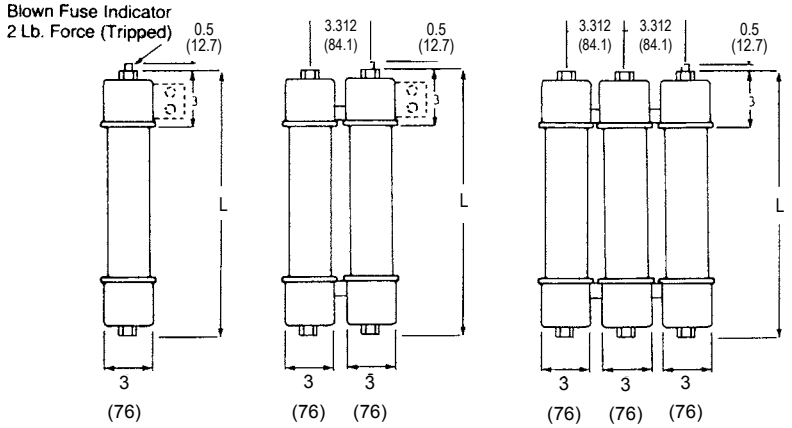

Figure A Figure B Figure C

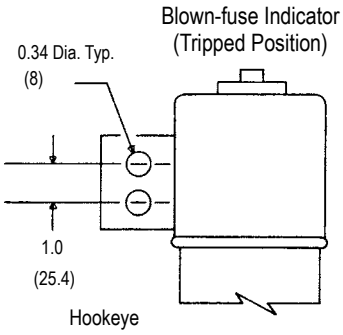

Motor Protection

Amp-Trap® and 9F60 Series

5.08kV R-Rated 9F60 EJ-2 Series

12” (305 mm) Clip Centers – Barrel diameter size D (3”)

Catalog No.	Size	Continuous Amp rating at 40°C	Minimum Interrupting Rating RMS Amp	No of Barrels	Fig.	Indicating	Dimension L Inches (mm)	1 Phase interrupting rating	
								UL Component Recognition Max IR RMS Sym	Max Voltage Tested Max IR RMS Sym
9F60LJD502	2R	70	195	1	D*	Yes	15.97 (406)	50kA at 5.08kV	50kA at 5.08kV
9F60LJD503	3R	100	270						
9F60LJD504	4R	130	370						
9F60LJD506	6R	170	580						
9F60LJD509	9R	200	820						
9F60LJD512	12R	230	1150						
9F60MJD518	18R	390	1800	2	E*				
9F60MJD524	24R	450	2400						
9F60LJN302	2R	70	195	1	D*	No	15.97 (406)	50kA at 5.08kV	50kA at 5.08kV
9F60LJN303	3R	100	270						
9F60LJN304	4R	130	370						
9F60LJN306	6R	170	580						
9F60LJN309	9R	200	820						
9F60LJN312	12R	230	1150						
9F60MJN318	18R	390	1800	2	E*				
9F60MJN324	24R	450	2400						

* Figures D & E are on page E23

5.08kV R-Rated 9F60 EJ-2 Series

14” (356 mm) Clip Centers – Barrel diameter size E (4”) – Use clip parts 9F61BNW452

Catalog No.	Size	Continuous Amp rating at 40°C	Minimum Interrupting Rating RMS Amp	Indicating	Dimension L Inches (mm)	1 Phase interrupting rating		No of Barrels	Fig.
						UL Component Recognition Max IR RMS Sym	Max Voltage Tested Max IR RMS Sym		
9F60NLD830	30R	550	3600	Yes	19.12 (486)	50kA at 5.08kV	50kA at 5.08kV	2	F
9F60NLD836	36R	650	4200						

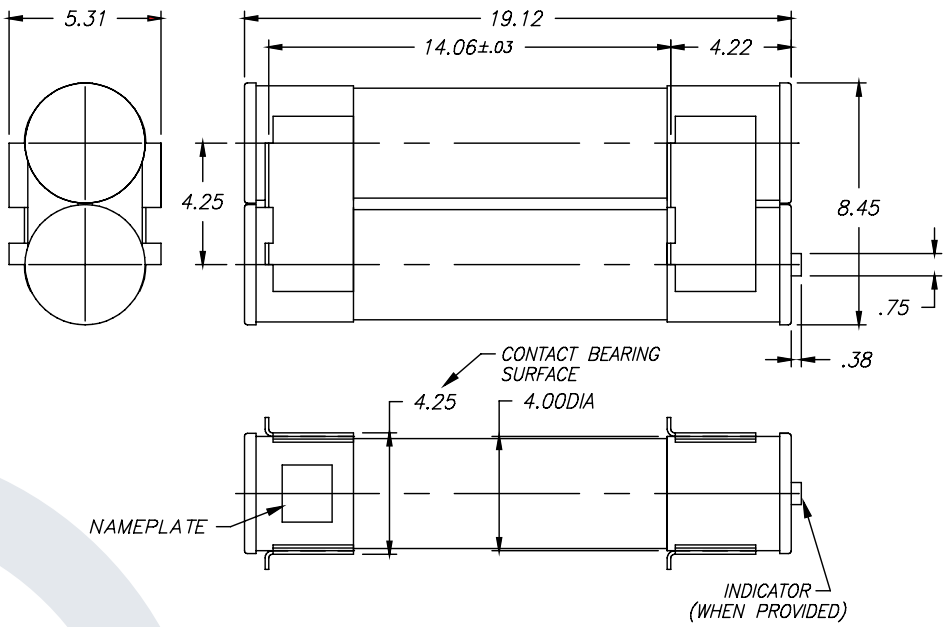

7.2kV Ferrule Mounted Fuses:

7.2kV R-Rated Amp-Trap Series

12.5” (317 mm) Clip Centers – Barrel diameter size D (3”)

Catalog No.	Size	Continuous Amp rating at 40°C	Minimum Interrupting Rating RMS Amp	No of Barrels	Fig.	Indicating	Dimension L Inches (mm)	1 Phase interrupting rating UL Component Recognition Max IR RMS Sym	Max Voltage Tested Max IR RMS Sym
A072F1D0R0-2R	2R	70	190						
A072F1D0R0-3R	3R	100	225						
A072F1D0R0-4R	4R	130	330						
A072F1D0R0-5R	5R	150	400	1	A				
A072F1D0R0-6R	6R	170	500			Yes	15.88 (403)	50kA at 7.2kV	50kA at 7.7kV
A072F1D0R0-9R	9R	200	740						
A072F1D0R0-12R	12R	230	955						
A072F2D0R0-18R	18R	390	1440	2	B				
A072F2D0R0-24R	24R	450	1910						

Indicator Flush with Surface
2 Lb. Force (Tripped)

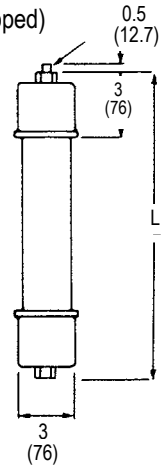

Figure A

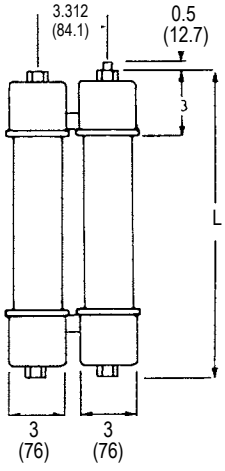

Figure B

Motor Protection
Amp-Trap® Bolt-In Series

5.08kV, 7.2kV and 15.5kV Bolt-In fuses:

Mersen R-Rated fuses are current-limiting, high interrupting rating fuses intended for the short circuit protection of medium voltage motors and motor controllers. R-Rated fuses are back-up fuses that have a minimum interrupting rating, and must be coordinated with overload relays in combination motor starters. The motor starter manufacturer generally specifies the R-Rated fuse size. These fuses are single, double, triple or quadruple barrels 3 inches diameter with end mounts designed for bolting directly to equipment bus or terminal pads.

Features/Benefits:

- The Amp-Trap Bolt-in series are UL Recognized.
- Bolt-in mounting for direct connection to bus or terminals.
- Current-limiting for superior equipment protection.
- Metal embossed catalog number and manufacturing date for lasting identification.
- Blown-fuse indicator to give positive identification of open fuse.

  Amp-Trap: 3” Barrel 2 lb tripped force - 0.50 Inch

Highlights:

- R-Rated
- UL recognized

Applications:

- Short circuit protection of medium voltage motors and motor controllers.

Definitions:

R-Rating: R-Rated fuses are back-up fuses that operate as follows (Per ANSI C37.46-2000): An R-Rated fuse will melt in the range of 15 to 35 seconds at a value of current equal to 100 times the “R” rating.

Back-up Current-Limiting Fuses: A back-up current-limiting fuse is a fuse that can interrupt any current between its rated minimum interrupting current and its maximum interrupting current. Back-up fuses are not designed or intended to open under overload conditions.

Continuous Ampere Rating at 40°C: The continuous amp rating defines the thermal capability of the fuse per ANSI C37.46 and should not be the sole factor in fuse selection.



E

Ratings:

Amp-Trap

A051B

Volts : 5.08kV AC
Amps : 2 to 38R
IR : 65kA Sym

A072B

Volts : 7.2kV AC
Amps : 2 to 24R
: 19R to 57X
IR : 50kA Sym
: 65kA Sym

A155B

Volts : 15.5kV AC
Amps : 9 to 38X
IR : 50kA Sym

Approvals:

- UL Recognized File E93367

Motor Protection

Amp-Trap® Bolt-In Series

5.08kV / 7.2kV Bolt-In fuses:

5.08kV R-Rated Amp-Trap Bolt-In Series

Catalog No.	Size	Continuous Amp rating at 40°C	Minimum Interrupting Rating RMS Amp	No of Barrels	Fig.	Indicating	1 Phase interrupting rating	
							UL Component Recognition Max IR RMS Sym	Max Voltage Tested Max IR RMS Sym
A051B1DAR0-2R	2R	70	190	1	A	Yes	65kA at 5.08kV	65kA at 5.5kV
A051B1DAR0-3R	3R	100	225					
A051B1DAR0-4R	4R	130	330					
A051B1DAR0-6R	6R	170	500					
A051B1DAR0-9R	9R	200	740					
A051B1DAR0-12R	12R	230	955					
A051B2DAR0-18R	18R	390	1440	2	B	Yes		
A051B2DAR0-24R	24R	450	1910					
A051B2DAR0-32R	32R	600	2500					
A051B2DAR0-38R	38R	700	3100					
A051B3DAR0-48X	48X	750	3600	3	C	Yes	50kA at 5.08kV	50kA at 5.2kV
A051B3DAR0-57X	57X	900	4500					

7.2kV R-Rated Amp-Trap Bolt-In Series

Catalog No.	Size	Continuous Amp rating at 40°C	Minimum Interrupting Rating RMS Amp	No of Barrels	Fig.	Indicating	1 Phase interrupting rating	
							UL Component Recognition Max IR RMS Sym	Max Voltage Tested Max IR RMS Sym
A072B1DAR0-2R	2R	70	190	1	A	Yes	50kA at 7.2kV	50kA at 7.7kV
A072B1DAR0-3R	3R	100	225					
A072B1DAR0-4R	4R	130	330					
A072B1DAR0-5R	5R	150	400					
A072B1DAR0-6R	6R	170	500					
A072B1DAR0-9R	9R	200	740					
A072B1DAR0-12R	12R	230	955					
A072B2DAR0-18R	18R	390	1440	2	B			
A072B2DAR0-24R	24R	450	1910					

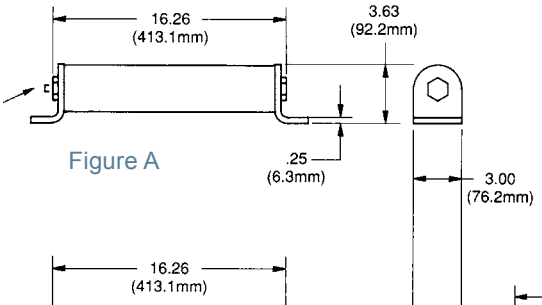

Figure A

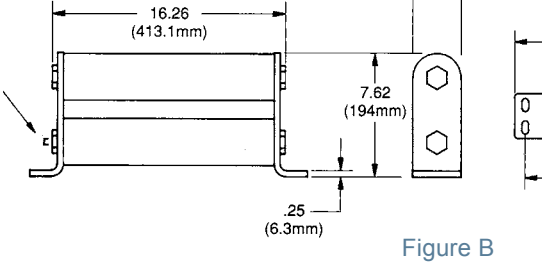

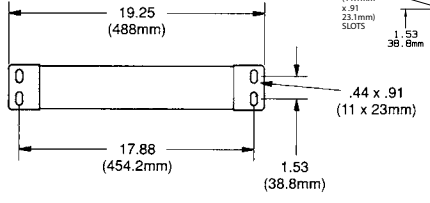

Figure B

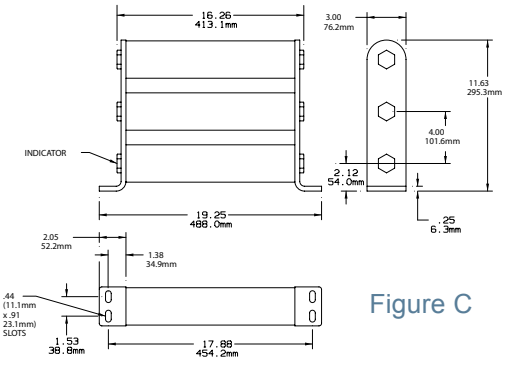

Figure C

Motor Protection

Amp-Trap® Bolt-In Series

7.2kV / 15.5kV Bolt-In fuses:

7.2kV R-Rated Amp-Trap Bolt-In Series

Catalog No.	Size	Continuous Amp rating at 40°C	Minimum Interrupting Rating RMS Amp	Indicating	1 Phase interrupting rating		No of Barrels	Fig.
					UL Component Recognition Max IR RMS Sym	Max Voltage Tested Max IR RMS Sym		
A072B1D0R0-19R	19R	300	1560	Yes	65kA at 7.2kV	65kA at 7.5kV	1	D
A072B2D0R0-32R	32R	540	3070			65kA at 7.66kV	2	E
A072B2D0R0-38R	38R	600	3480					
A072B3DBR0-48X	48X	750	4360			65kA at 7.66kV	3	F
A072B3DBR0-57X	57X	900	5000			65kA at 7.2kV	3	F

15.5kV R-Rated Amp-Trap Bolt-In Series

Catalog No.	Size	Continuous Amp rating at 40°C	Minimum Interrupting Rating RMS Amp	Indicating	1 Phase interrupting rating		No of Barrels	Fig.
					UL Component Recognition Max IR RMS Sym	Max Voltage Tested Max IR RMS Sym		
A155B2D0R0-9R	9R	200	888	Yes	50 kA at 15.5kV	50 kA at 15.5kV	2	G
A155B2D0R0-12R	12R	230	1200					
A155B3D0R0-18X	18X	390	1900				3	H
A155B3D0R0-24X	24X	450	2633					
A155B4D0R0-32X	32X	600	3510				4	J
A155B4D0R0-38X	38X	700	4000					

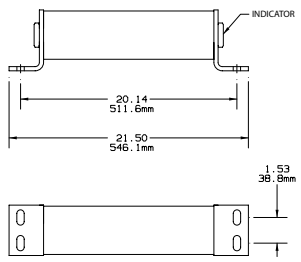

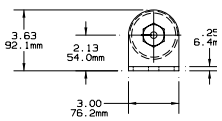

Figure D

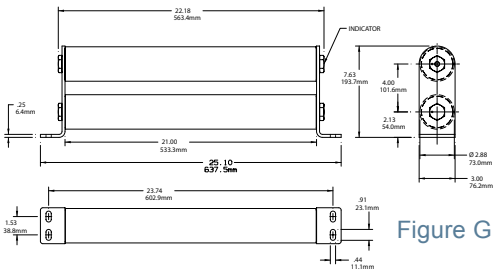

Figure G

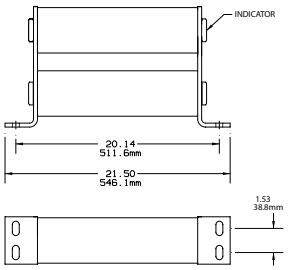

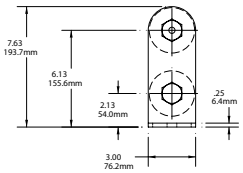

Figure E

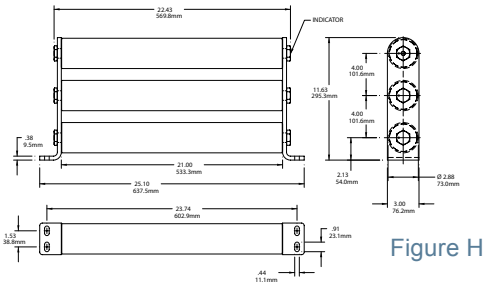

Figure H

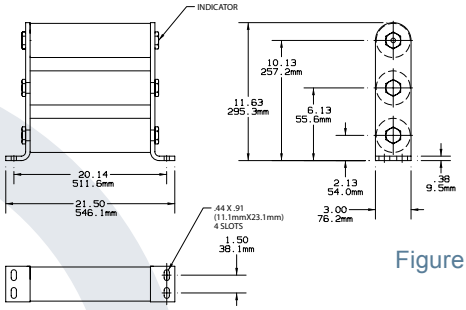

Figure F

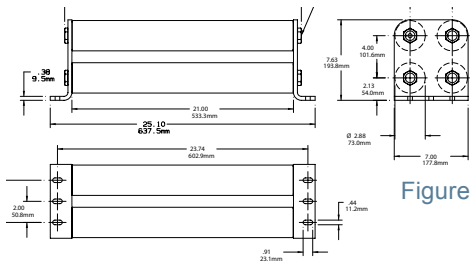

Figure J

For the most current product performance data visit us-ferrazshawmut.mersen.com and use catalog search.

Motor Protection

Amp-Trap® DIN-Style Fuses

R-Rated IEC DIN style MV fuses

Amp-Trap® R-Rated DIN style fuses are current-limiting, high interrupting rating fuses, intended for the short circuit protection of medium voltage motors and motor controllers. This product range offers North American R-Rated performance in the IEC 282-1 DIN mounting configuration of 442mm. R-Rated fuses are applied as back up fuses that have a minimum interrupting rating, and must be coordinated with overload relays in combination motor starters. Amp-Trap R-Rated, DIN type fuses are offered in voltage ratings of 3.3kV, 5.3kV and 7.2kV in ratings from 2R to 19R. All fuses within this product group are UL component recognized.

Features/Benefits:

- Clip mount DIN 45: R-Rated fuses with North American ANSI characteristics in a standard DIN 442mm size.
- Current-limiting for superior equipment protection
- Blown fuse indicator provides positive identification of open fuse. 4.5lb tripping force - 1.0" inch.

Highlights:

- R-Rated
- UL recognized

Applications:

- Short circuit protection of medium voltage motors and motor controllers.

Definitions:

R-Rating: R-Rated fuses are back-up fuses that operate as follows (Per ANSI C37.46-2000): An R-Rated fuse will melt in the range of 15 to 35 seconds at a value of current equal to 100 times the "R" rating.

Back-up Current-Limiting Fuses: A back-up current-limiting fuse is a fuse that can interrupt any current between its rated minimum interrupting current and its maximum interrupting current. Back-up fuses are not designed or intended to open under overload conditions.

Continuous Ampere Rating at 40°C: The continuous amp rating defines the thermal capability of the fuse per ANSI C37.46 and should not be the sole factor in fuse selection.

Spring-Reinforced Clip
MR45 & Spring Ref.# L096472

Fuse-Holder: SI 24/442 Ref # K209425
In compliance with IEC 282-1, DIN standard 43625.

** Note: Ratings above 19R may be achieved by paralleling fuses. Please consult factory for details.*

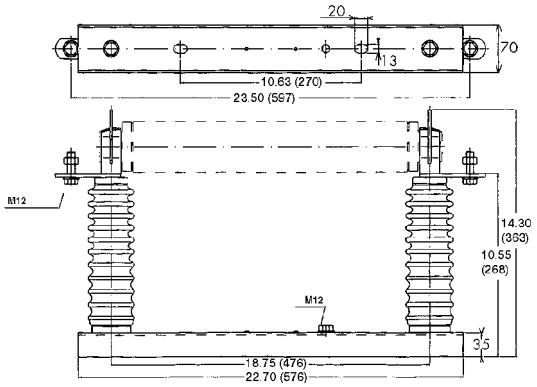



Ratings:

A033D1
Volts : 3300V AC
Amps : 2 to 19R*
IR : 65kA Sym

A055D1
Volts : 5300V AC
Amps : 2 to 19R*
IR : 65kA Sym

A072D1
Volts : 7200V AC
Amps : 2 to19R*
IR : 65kA Sym

Approvals:

- UL recognized component File E93367

Motor Protection

Amp-Trap® DIN-Style Fuses

Fig.	Catalog Number	Size	Continuous Amp Rating 55°C**	Continuous Amp Rating 40°C**	Minimum Interrupting Rating RMS Rating	1 Phase Interrupting Rating Maximum Tested	
						RMS Asym	RMS Sym
3.3kv Max. DIN IEC Style 442 mm							
A	A033D1DSRO-2R	2R	63	70	190	100kA @ 3300V	65kA @ 3300V
A	A033D1DSRO-3R	3R	90	100	225		
A	A033D1DSRO-4R	4R	115	130	225		
A	A033D1DSRO-5R	5R	135	150	400		
A	A033D1DSRO-6R	6R	150	170	540		
A	A033D1DSRO-9R	9R	180	200	780		
A	A033D1DSRO-12R	12R	210	230	955		
A	A033D1DSRO-13R	13R*	230	260	1050		
A	A033D1DSRO-16R	16R*	270	300	1200		
A	A033D1DSRO-19R	19R*	280	310	1280		
5.5kV Max. DIN IEC Style 442 mm							
A	A055D1DSRO-2R	2R	63	70	190	100kA @ 5500V	65kA @ 5500V
A	A055D1DSRO-3R	3R	90	100	225		
A	A055D1DSRO-4R	4R	115	130	225		
A	A055D1DSRO-5R	5R	135	150	400		
A	A055D1DSRO-6R	6R	150	170	540		
A	A055D1DSRO-9R	9R	180	200	780		
A	A055D1DSRO-12R	12R	210	230	955		
A	A055D1DSRO-13R	13R*	230	260	1050		
A	A055D1DSRO-16R	16R*	270	300	1200		
A	A055D1DSRO-19R	19R*	280	310	1280		
7.2kV Max. DIN IEC Style 442 mm							
A	A072D1DSRO-2R	2R	63	70	190	100kA @ 7200V	65kA @ 7200V
A	A072D1DSRO-3R	3R	90	100	225		
A	A072D1DSRO-4R	4R	115	130	400		
A	A072D1DSRO-5R	5R	135	150	540		
A	A072D1DSRO-6R	6R	150	170	550		
A	A072D1DSRO-9R	9R	180	200	780		
A	A072D1DSRO-12R	12R	210	230	955		
A	A072D1DSRO-13R	13R*	230	260	1050		
A	A072D1DSRO-16R	16R*	270	300	1200		
A	A072D1DSRO-19R	19R*	280	310	1280		

** 13R, 16R and 19R are not standard ratings defined in ANSI C37.46.*

*** This rating defines the thermal capability of the fuse per ANSI 37.46 and should not be the sole factor in fuse selection.*

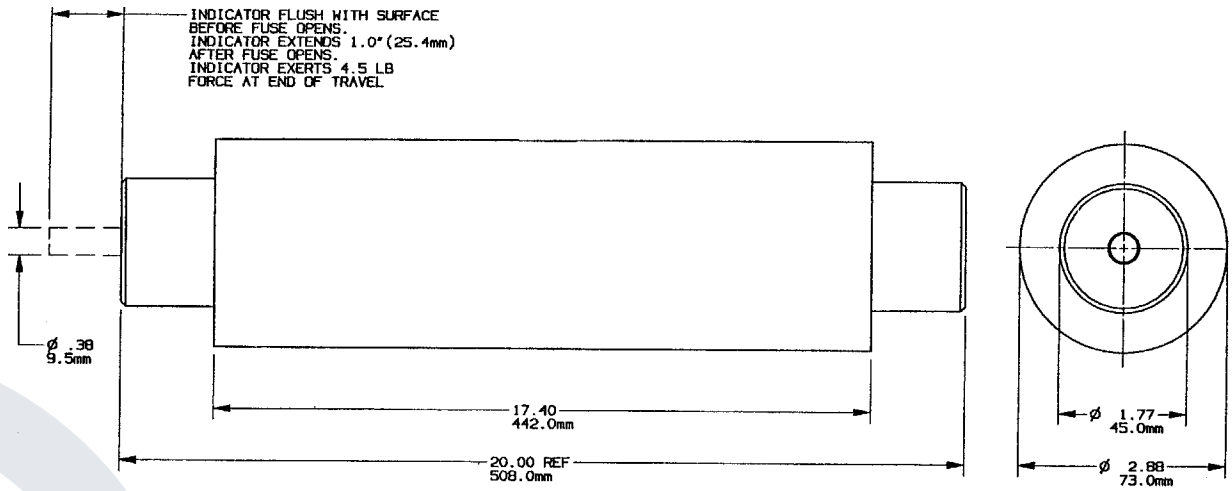

Figure A

Potential Transformer

Amp-Trap® and 9F60 Series PT Fuses

0.625kV – 2.4kV – 2.75kV – 4.8kV – 5.0kV – 5.5kV – 7.2kV – 8.25kV and 15.5kV ferrule mounted fuses:

Mersen PT fuses are current-limiting fuses with high interrupting rating, used for the primary winding protection of potential transformer. They are small dimension ferrule type fuses and mount in standard clips. Current ratings are from 0.25A to 5A.

Features/Benefits:

- Ferrule mounting for standard clips and interchangeability with other brands of fuses.
- Current-limiting for superior equipment protection.
- Non-venting for silent operation.
- Metal embossed catalog number and manufacturing date for lasting identification.
- Blown-fuse indicator to give positive identification of open fuse fuse is available on the 9F60 series.

Applications:

- Primary protection for potential transformers (PT) or control power transformers (CPT).

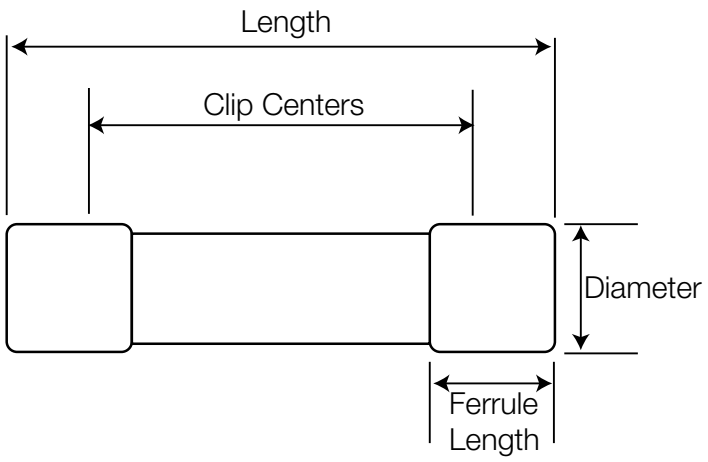



Ratings:

Amp-Trap

A240T

Volts : 2.4kV AC
Amps : 0.05 to 5A
IR : 50kA Sym

A480T

Volts : 4.8kV AC
Amps : 0.05 to 5A
IR : 50kA Sym

A500T

Volts : 5.05kV AC
Amps : 0.25 to 5A
IR : 50kA Sym

A720T

Volts : 7.2kV AC
Amps : 0.5 to 3A
IR : 50kA Sym

9F60 Series EJ-1

9F60A

Volts : .625kV AC
Amps : 3 to 5A
IR : 100kA Sym

9F60B

Volts : 2.75kV AC
: 5.5kV AC
: 8.25kV AC
: 15.5kV AC
Amps : 0.5 to 3A
IR : 60kA Sym
: 80kA Sym
: 120kA Sym

Potential Transformer

Amp-Trap® and 9F60 Series PT Fuses

0.625kV / 2.4kV / 2.75kV Ferrule mounted fuses:

0.625kV Potential Transformer fuses – 9F60 Series, EJ-1

4.25” (108 mm) Clip Centers

Catalog No.	Amp Rating	Indicating	Diameter Inches (mm)	Length Inches (mm)	Ferrule Length Inches (mm)	Max Voltage	Max IR RMS Sym	Spare Parts (Clips*)	Spare Parts (Live Parts)	Fuse Support Indoor (EK-1)
9F60AAA003	3A	Yes	0.812 (20.6)	4.625 (117.5)	1.12 (28.4)	.625 kV	100kA	C08917P	–	–
9F60AAA005	5A									

2.4kV Potential Transformer fuses – Amp-Trap Series

4.00” (102 mm) Clip Centers

Catalog No.	Amp Rating	Indicating	Diameter Inches (mm)	Length Inches (mm)	Ferrule Length Inches (mm)	Max Voltage	Max IR RMS Sym	Spare Parts (Clips*)	Spare Parts (Live Parts)	Fuse Support Indoor (EK-1)
A240T1/2E	0.5A	No	0.812 (20.6)	4.625 (117.5)	0.625 (15.9)	2.4kV	50kA	C08917P	–	–
A240T1E	1A									
A240T2E	2A									
A240T5E	5A									

2.75kV Potential Transformer fuses – 9F60 Series, EJ-1

4.25” (108 mm) Clip Centers

Catalog No.	Amp Rating	Indicating	Diameter Inches (mm)	Length Inches (mm)	Ferrule Length Inches (mm)	Max Voltage	Max IR RMS Sym	Spare Parts (Clips*)	Spare Parts (Live Parts)	Fuse Support Indoor (EK-1)
9F60AAB001	1A	Yes	0.812 (20.6)	4.625 (117.5)	1.12 (28.4)	2.75kV	60kA	C08917P	–	–
9F60AAB002	2A									

2.75kV Potential Transformer fuses – 9F60 Series, EJ-1

6” (152 mm) Clip Centers

Catalog No.	Amp Rating	Indicating	Diameter Inches (mm)	Length Inches (mm)	Ferrule Length Inches (mm)	Max Voltage	Max IR RMS Sym	Spare Parts (Clips*)	Spare Parts (Live Parts)	Fuse Support Indoor (EK-1)
9F60BBB001	1A	Yes	1.625 (41.3)	7.375 (187)	1.31 (33.3)	2.75kV	60kA	9F61BWW460	9F61BNW450	–
9F60BBB002	2A									
9F60BBB003	3A									

2.75kV Potential Transformer fuses – 9F60 Series, EJ-1

8.12” (206 mm) Clip Centers

Catalog No.	Amp Rating	Indicating	Diameter Inches (mm)	Length Inches (mm)	Ferrule Length Inches (mm)	Max Voltage	Max IR RMS Sym	Spare Parts (Clips*)	Spare Parts (Live Parts)	Fuse Support Indoor (EK-1)
9F60BDB001	1A	Yes	1.625 (41.3)	9.5 (241)	1.31 (33.3)	2.75 kV	60kA	9F61BWW460	9F61BNW450	9F61ABB101
9F60BDB002	2A									
9F60BDB003	3A									

**Use two clips per fuse*

Potential Transformer

Amp-Trap® and 9F60 Series PT Fuses

4.8kV / 5kV / 5.4kV Ferrule Mounted Fuses:

4.8kV Potential Transformer fuses – Amp-Trap Series

5“ (127 mm) Clip Centers

Catalog No.	Amp Rating	Indicating	Diameter Inches (mm)	Length Inches (mm)	Ferrule Length Inches (mm)	Max Voltage	Max IR RMS Sym	Spare Parts (Clips*)	Spare Parts (Live Parts)	Fuse Support Indoor (EK-1)
A480T1/2E	0.5A	No	0.812 (20.6)	5.625 (143)	0.625 (15.9)	4.8kV	50kA	C08917P	–	–
A480T3/4E	0.75A									
A480T1E	1A									
A480T2E	2A									
A480T3E	3A									
A480T4E	4A									
A480T5E	5A									

5kV Potential Transformer fuses – Amp-Trap Series

5” (127 mm) Clip Centers

Catalog No.	Amp Rating	Indicating	Diameter Inches (mm)	Length Inches (mm)	Ferrule Length Inches (mm)	Max Voltage	Max IR RMS Sym	Spare Parts (Clips*)	Spare Parts (Live Parts)	Fuse Support Indoor (EK-1)
A500T1/4E-1	0.25A	No	1.00 (25.4)	5.625 (143)	0.563 (14.3)	5.0kV	50kA	–	–	–
A500T1/2E-1	0.5A									
A500T1E-1	1A									
A500T2E-1	2A									
A500T3E-1	3A									
A500T4E-1	4A									
A500T5E-1	5A									

5.5kV Potential Transformer fuses – 9F60 Series, EJ-1

6.00” (152 mm) Clip Centers

Catalog No.	Amp Rating	Indicating	Diameter Inches (mm)	Length Inches (mm)	Ferrule Length Inches (mm)	Max Voltage	Max IR RMS Sym	Spare Parts (Clips*)	Spare Parts (Live Parts)	Fuse Support Indoor (EK-1)
9F60BBD905	0.5A	Yes	1.625 (41.3)	7.375 (187)	1.31 (33.3)	5.5 kV	80kA	9F61BWW460	9F61BNW450	–
9F60BBD001	1A									
9F60BBD002	2A									
9F60BBD003	3A									
9F60BBN905	0.5A	No	1.625 (41.3)	7.375 (187)	1.31 (33.3)	5.5 kV	80kA	9F61BWW460	9F61BNW450	–
9F60BBN001	1A									
9F60BBN002	2A									
9F60BBN003	3A									

5.5kV Potential Transformer fuses – 9F60 Series, EJ-1

8.12” (206 mm) Clip Centers

Catalog No.	Amp Rating	Indicating	Diameter Inches (mm)	Length Inches (mm)	Ferrule Length Inches (mm)	Max Voltage	Max IR RMS Sym	Spare Parts (Clips*)	Spare Parts (Live Parts)	Fuse Support Indoor (EK-1)
9F60BDD905	0.5A	Yes	1.625 (41.3)	9.5 (241)	1.31 (33.3)	5.5 kV	80kA	9F61BWW460	9F61BNW450	9F61ABB101
9F60BDD001	1A									
9F60BDD002	2A									
9F60BDD003	3A									

*Use two clips per fuse

Potential Transformer

Amp-Trap® and 9F60 Series PT Fuses

7.2kV / 8.25kV / 15.5kV Ferrule mounted fuses:

7.2kV Potential Transformer fuses – Amp-Trap Series

8.88“ (227 mm) Clip Centers

Catalog No.	Amp Rating	Indicating	Diameter Inches (mm)	Length Inches (mm)	Ferrule Length Inches (mm)	Max Voltage	Max IR RMS Sym	Spare Parts (Clips*)	Spare Parts (Live Parts)	Fuse Support Indoor (EK-1)
A720T1/2E-1	0.5A	No	0.812 (20.6)	9.5 (241)	0.625 (15.9)	7.2kV	50kA	C08917P	–	–
A720T3/4-1	0.75A									
A720T1E-1	1A									
A720T2E-1	2A									
A720T3E-1	3A									

8.25kV Potential Transformer fuses – 9F60 Series, EJ-1

8.12” (206 mm) Clip Centers

Catalog No.	Amp Rating	Indicating	Diameter Inches (mm)	Length Inches (mm)	Ferrule Length Inches (mm)	Max Voltage	Max IR RMS Sym	Spare Parts (Clips*)	Spare Parts (Live Parts)	Fuse Support Indoor (EK-1)
9F60BDE905	0.5A	Yes	1.625 (41.3)	9.5 (241)	1.31 (33.3)	8.25 kV	80kA	9F61BWW460	9F61BNW450	9F61ABG101
9F60BDE001	1A									
9F60BDE002	2A									
9F60BDE003	3A									

15.5kV Potential Transformer fuses – 9F60 Series, EJ-1

11.5” (292 mm) Clip Centers

Catalog No.	Amp Rating	Indicating	Diameter Inches (mm)	Length Inches (mm)	Ferrule Length Inches (mm)	Max Voltage	Max IR RMS Sym	Spare Parts (Clips*)	Spare Parts (Live Parts)	Fuse Support Indoor (EK-1)
9F60BHH905	0.5A	Yes	1.625 (41.3)	12.875 (327)	1.31 (33.3)	15.5 kV	120kA	9F61BWW460	9F61BNW450	9F61ADG101 (13.8kV nominal - 95 kV BIL) 9F61ADJ101 (14.4kV nominal - 110kV BIL)
9F60BHH001	1A									
9F60BHH002	2A									
9F60BHH003	3A									

*Use two clips per fuse

Capacitor Protection

Amp-Trap® and 9F60 Series

Medium voltage capacitor fuses:

Mersen capacitor fuses are designed to ANSI C37-41. They are current-limiting operating without noise or discharge and are designed to be used indoors in a general purpose enclosure or outdoors in a weatherproof enclosure. These are non-disconnecting fuses requiring the use of a disconnect switch. These capacitor fuses provide both short circuit and overload protection and are intended to protect against capacitor case rupture or dielectric failure within the capacitor.

The various mounting configurations offer manufacturers a wide range of cost and space saving solutions and a large choice of equivalent products to users.

Features/Benefits:

- High interrupting capacity
- Current limitation
- Blown-fuse indication
- Direct mount
- Clip style mount
- Bus mount
- Non-venting for silent operation

Applications:

- Capacitor Protection
- Power Factor Correction Equipment
- Harmonic Filtering Equipment
- Induction Heating System
- High Power Drive
- Welders

Catalog Numbering System:

A 250 C 125 - 30

- **A** — AC Voltage
- **250** — Voltage Rating ÷ 10 (250 = 2.5kV)
- **C** — Capacitor Fuse
- **125** — Current Rating
- **30** — Mounting Configuration



Ratings:

A100C
Volts : 1000V AC Max.
Amps : 25 to 125 A
IR : 50 kA Sym

A150C
Volts : 1500V AC Max.
Amps : 25 to 200 A
IR : 40 kA Sym

A250C
Volts : 2500V AC Max.
Amps : 25 to 200 A
IR : 50 kA Sym

A300C
Volts : 3000V AC Max.
Amps : 50 to 175 A
IR : 50 kA Sym

A430C
Volts : 4300V AC Max.
Amps : 6 to 100 A
IR : 65 kA Sym

A550C
Volts : 5500V AC Max.
Amps : 6 to 75 A
IR : 65 kA Sym

9F60RJD
Volts : 5500V AC Max.
Amps : 25 to 80 A
IR : 50 kA Sym

9F60RJF
Volts : 9520V AC Max.
Amps : 15 to 40A
IR : 50 kA Sym

Capacitor Protection

Amp-Trap® and 9F60 Series

1.0 kV - 1.5 kV Capacitor Fuses Amp-Trap Series

Catalog Number	Ampere Rating	Melting I^2t (kA^2s)	Maximum 1 Clearing I2t (kA^2s)	Maximum 1 Phase Interrupting Rating	Overall Length Inches (mm)	Tube Length Inches (mm)	Ind. Housing Inches (mm)	Body Dia Inches (mm)	Bracket Dimensions Inches (mm)	
1.5 kV Max Type 10 inner thread to screw					A	B	C	D	E	F
A150C25-10	25	4	12	40 kA @1500V RMS Sym	7.08 (179.8)	6.38 (162.1)	.70 (17.8)	1.42 (36.0)		
A150C50-10	50	16	50							
A150C60-10	60	25	70							
A150C75-10	75	35	110							
A150C90-10	90	50	150							
A150C100-10	100	65	200							
A150C110-10	110	80	250							
A150C120-10	120	100	310							
A150C125-10	125	125	330							
A150C130-10	130	125	330							
A150C135-10	135	130	350							
A150C140-10	140	130	350							
A150C150-10	150	150	390							
A150C160-10	160	185	480							
A150C165-10	165	185	480							
A150C175-10	175	225	600							
A150C200-10	200	300	800							
1.5 kV Max Type 20 screw to bolt (flat bracket)										
A150C25-20	25	3.2	6.5	40 kA @1500V RMS Sym	6.84 (173.6)	5.73 (145.5)	1.42 (36.0)	1.10 (27.9)	3.00 (76.2)	1.25 (31.8)
A150C50-20	50	13	27							
A150C60-20	60	18	38							
A150C75-20	75	30	60							
A150C90-20	90	35	72							
A150C100-20	100	52	105							
A150C110-20	110	58	120							
A150C120-20	120	73	150							
A150C125-20	125	82	165							
A150C130-20	130	90	190							
A150C135-20	135	90	190							
A150C140-20	140	105	220							
A150C150-20	150	120	240							
A150C160-20	160	185	480		7.48 (189.9)	6.37 (161.8)	.75 (19.1)	1.42 (36.0)	3.00 (76.2)	1.25 (31.8)
A150C165-20	165	185	480							
A150C175-20	175	225	600							
A150C200-20	200	300	800							

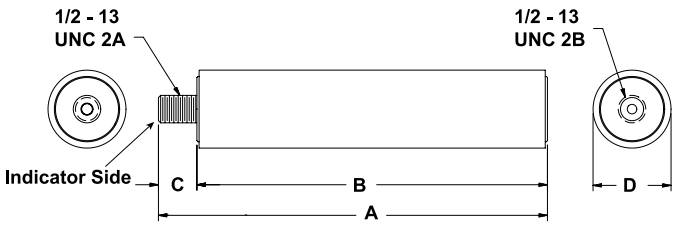

Type 10

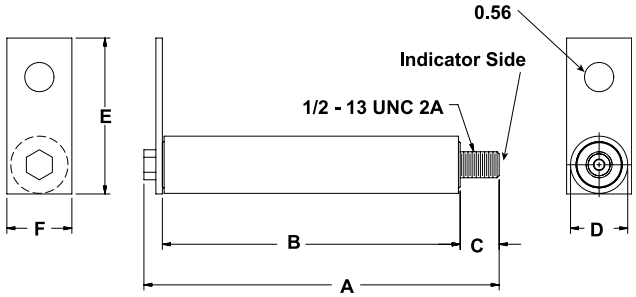

Type 20

Capacitor Protection

Amp-Trap® and 9F60 Series

1.0 kV - 1.5 kV Capacitor Fuses Amp-Trap Series

Catalog Number	Ampere Rating	Melting I^2t (kA^2s)	Maximum 1 Clearing I^2t (kA^2s)	Maximum 1 Phase Interrupting Rating	Overall Length Inches (mm)	Tube Length Inches (mm)	Ind. Housing Inches (mm)	Body Dia Inches (mm)	Bracket Dimensions Inches (mm)	
					A	B	C	D	E	F
1.0 kV Max Type 30 external female to bolt (L bracket)										
A100C25-30	25	4	10	50 kA @1000V RMS Sym	6.38 (162.1)	4.42 (112.3)	75 (19.1)	1.10 (27.9)	5.76 (146.2)	1.25 (31.8)
A100C50-30	50	16	40							
A100C60-30	60	25	60							
A100C75-30	75	35	95							
A100C90-30	90	50	130							
A100C100-30	100	65	165							
A100C110-30	110	80	205							
A100C125-30	125	100	250							
1.5 kV Max Type 40 external female to external female										
A150C100-40	100	125	140	40 kA @1500V RMS Sym	6.84 (173.6)	4.78 (121.4)	.51 (13.0)	1.75 (27.9)	.75 (19.1)	1.41 (35.8)
A150C110-40	110	125	180							
A150C125-40	125	130	230							
A150C130-40	130	130	230							
A150C140-40	140	150	285							
A150C150-40	150	185	315							
A150C160-40	160	185	360							
A150C175-40	175	225	410							
A150C200-40	200	300	560							
1.5 kV Max Type 50 screw to bolt (L bracket)										
A150C50-50	50	13	27	40 kA @1500V RMS Sym	8.11 (206.0)	5.74 (145.8)	.75 (19.1)	1.10 (27.9)	7.49 (190.2)	1.25 (31.8)
A150C60-50	60	18	38							
A150C75-50	75	30	60							
A150C90-50	90	35	72							
A150C100-50	100	52	105							
A150C110-50	110	58	120							
A150C120-50	120	73	150							
A150C125-50	125	82	165							
A150C130-50	130	90	190							
A150C135-50	135	90	190							
A150C140-50	140	105	220							
A150C150-50	150	120	240							
A150C160-50	160	185	480		8.71 (221.1)	6.51 (165.2)	.70 (17.8)	1.42 (36.0)	8.08 (205.2)	
A150C165-50	165	185	480							
A150C175-50	175	225	600							
A150C200-50	200	300	800							

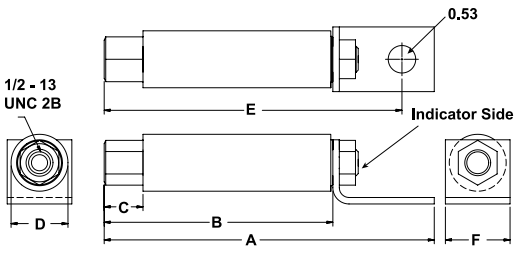

Type 30

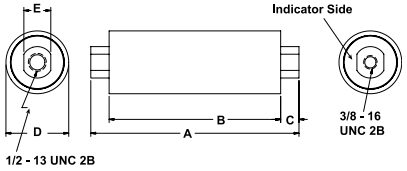

Type 40

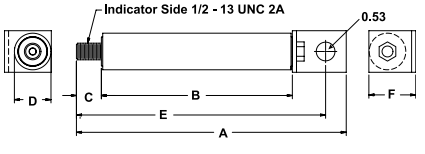

Type 50

Capacitor Protection

Amp-Trap® and 9F60 Series

2.5 kV Capacitor Fuses Amp-Trap Series

Catalog Number	Ampere Rating	Melting I^2t (kA^2s)	Maximum 1 Clearing I^2t (kA^2s)	Maximum 1 Phase Interrupting Rating	Overall Length Inches (mm) A	Tube Length Inches (mm) B	Ind. Housing Inches (mm) C	Body Dia Inches (mm) D	Bracket Dimensions Inches (mm) E	F
2.5 kV Max Type 10 inner thread to screw										
A250C25-10	25	3	9	50 kA @2500V RMS Sym	7.67 (194.8)	6.92 (175.8)	.75 (19.1)	1.42 (36.0)		
A250C50-10	50	12	35							
A250C65-10	65	18	60							
A250C75-10	75	25	85							
A250C80-10	80	25	85							
A250C100-10	100	45	150							
A250C110-10	110	60	190							
A250C125-10	125	75	240							
A250C135-10	135	115	395							
A250C150-10	150	130	460							
A200C165-10	165	150	350	40 kA @2000V RMS Sym	7.67 (194.8)	6.92 (175.8)	.75 (19.1)	1.42 (36.0)		
A200C175-10	175	165	440							
A200C200-10	200	225	500							
2.5 kV Max Type 30 external female to bolt (L bracket)										
A250C25-30	25	3	9	50 kA @2500V RMS Sym	9.41 (239.0)	6.66 (169.2)	.75 (19.1)	1.10 (27.9)	8.79 (223.2)	1.25 (31.8)
A250C50-30	50	12	35							
A250C65-30	65	18	60							
A250C75-30	75	25	85							
A250C80-30	80	25	85							
A250C100-30	100	45	150							
A250C110-30	110	60	190							
A250C125-30	125	75	240							
2.5 kV Max Type 50 screw to bolt (L bracket)										
A250C25-50	25	3	9	50 kA @2500V RMS Sym	9.11 (231.4)	6.74 (171.2)	.75 (19.1)	1.10 (27.9)	8.49 (215.6)	1.25 (31.8)
A250C50-50	50	12	35							
A250C65-50	65	18	60							
A250C75-50	75	25	85							
A250C80-50	80	25	85							
A250C100-50	100	45	150							
A250C110-50	110	60	190							
A250C125-50	125	75	240							
A250C135-50	135	115	395							
A250C150-50	150	130	460							
A200C165-50	165	150	350	40 kA @2000V RMS Sym	9.29 (236.0)	6.92 (175.8)	.75 (19.1)	1.42 (36.0)	8.67 (220.2)	1.25 (31.8)
A200C175-50	175	165	440							
A200C200-50	200	225	500							

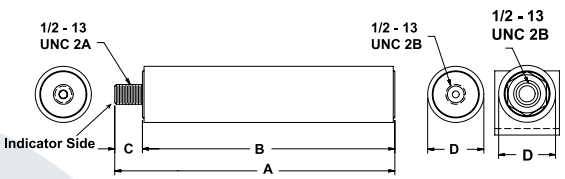

Type 10

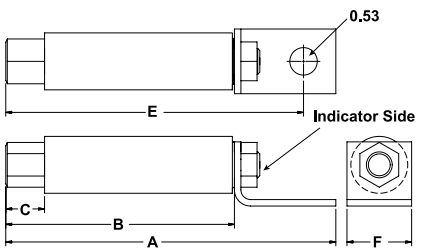

Type 30

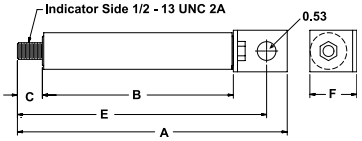

Type 50

Capacitor Protection

Amp-Trap® and 9F60 Series

3.0 kV Capacitor Fuses Amp-Trap Series

Catalog Number	Ampere Rating	Melting I^2t (kA^2s)	Maximum 1 Clearing I^2t (kA^2s)	Maximum 1 Phase Interrupting Rating	Overall Length Inches (mm)	Tube Length Inches (mm)	Ind. Housing Inches (mm)	Body Dia Inches (mm)	Bracket Dimensions Inches (mm)	
3.0 kV Max Type 10 inner thread to screw					A	B	C	D	E	F
A300C50-10	60	12	35							
A300C60-10	75	18	65							
A300C75-10	95	26	80							
A300C95-10	100	45	140		10.16 (258.1)	9.33 (237.0)	.75 (19.1)	1.10 (27.9)		
A300C100-10	115	45	140	50 kA @3000V						
A300C115-10	125	60	200	RMS Sym						
A300C125-10	130	75	260							
A300C130-10	150	75	260							
A300C150-10	175	105	350		10.16 (258.1)	9.33 (237.0)	.75 (19.1)	1.42 (36.0)		
A300C175-10		165	530							
3.0 kV Max Type 20 screw to bolt (flat bracket)										
A300C50-20	60	12	35							
A300C60-20	75	18	65							
A300C75-20	95	26	80							
A300C95-20	100	45	140		10.59 (269.1)	9.33 (237.0)	.75 (19.1)	1.10 (27.9)	3.00 (76.2)	1.25 (31.8)
A300C100-20	115	45	140	50 kA @3000V						
A300C115-20	125	60	200	RMS Sym						
A300C125-20	130	75	260							
A300C130-20	150	75	260							
A300C150-20	175	105	350		10.59 (269.0)	9.33 (237.0)	.75 (19.1)	1.42 (36.0)	3.00 (76.2)	1.25 (31.8)
A300C175-20		165	530							
3.0 kV Max Type 60 bolt (L bracket) to bolt (L bracket)										
A300C50-60	60	12	35							
A300C60-60	75	18	65							
A300C75-60	95	26	80							
A300C95-60	100	45	140							
A300C100-60	115	45	140	50 kA @3000V						
A300C115-60	125	60	200	RMS Sym						
A300C125-60	130	75	260							
A300C130-60	150	75	260		13.27 (337.1)	9.41 (239.0)	.47 (11.9)	1.42 (36.0)	12.02 (305.2)	1.25 (31.8)
A300C150-60	175	105	350							
A300C175-60		165	530							

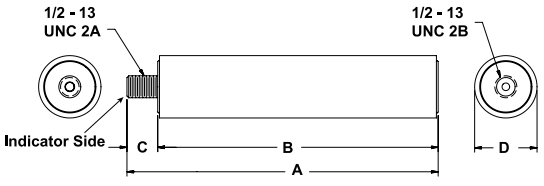

Type 10

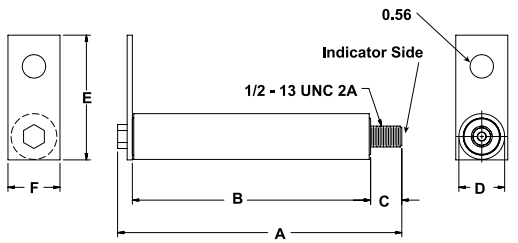

Type 20

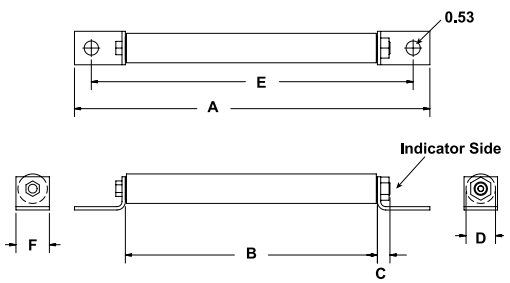

Type 60

Capacitor Protection

Amp-Trap® and 9F60 Series

4.3 kV Capacitor Fuses Amp-Trap Series

Catalog Number	Ampere Rating	Melting I^2t (kA^2s)	Maximum 1 Clearing I^2t (kA^2s)	Maximum 1 Phase Interrupting Rating	Overall Length Inches (mm) A	Tube Length Inches (mm) B	Ind. Housing Inches (mm) C	Body Dia Inches (mm) D	Bracket Dimensions Inches (mm) E	F
4.3 kV Max Type 15 external female to bolt										
A430C6-15	6	0.4	2.49	65 kA @4300V RMS Sym	9.50 (241.3)	7.12 (180.8)	.75 (19.1)	2.00 (50.8)	8.00 (203.2)	.75 (19.1)
A430C8-15	8	0.73	4.31							
A430C10-15	10	1.14	6.38							
A430C12-15	12	1.6	8.64							
A430C18-15	18	3	15							
A430C20-15	20	4.5	22.1							
A430C25-15	25	6.5	31.2							
A430C30-15	30	7.7	36.2							
A430C35-15	35	9	41.4							
A430C45-15	45	12	54.6							
A430C50-15	50	15	68							
A430C65-15	65	29	84							
A430C75-15	75	36	100							
A430C80-15	80	42	120							
A430C90-15	90	58	160							
A430C100-15	100	66	180							
4.3 kV Max Type 70 tube to tube										
A430C6-70	6	0.4	2.49	65 kA @4300V RMS Sym	10.00 (254.0)	7.12 (180.8)	1.00 (25.4)	2.00 (50.8)	8.00 (203.2)	.63 (15.9)
A430C8-70	8	0.73	4.31							
A430C10-70	10	1.14	6.38							
A430C12-70	12	1.6	8.64							
A430C18-70	18	3	15							
A430C20-70	20	4.5	22.1							
A430C25-70	25	6.5	31.2							
A430C30-70	30	7.7	36.2							
A430C35-70	35	9	41.4							
A430C45-70	45	12	54.6							
A430C50-70	50	15	68							
A430C65-70	65	29	84							
A430C75-70	75	36	100							
A430C80-70	80	42	120							
A430C90-70	90	58	160							
A430C100-70	100	66	180							
4.35 kV Max Type 75 external female to tube										
A430C6-75	6	0.4	2.49	65 kA @ 4300V RMS Sym	9.75 (247.7)	7.12 (180.8)	1.00 (2.54)	2.00 (50.8)	8.00 (203.2)	0.63 (15.9)
A430C8-75	8	0.73	4.31							
A430C10-75	10	1.14	6.38							
A430C12-75	12	1.6	8.64							
A430C18-75	18	3	15							
A430C20-75	20	4.5	22.1							
A430C25-75	25	6.5	31.2							
A430C30-75	30	7.7	36.2							
A430C35-75	35	9	41.4							
A430C45-75	45	12	54.6							
A430C50-75	50	15	68							
A430C65-75	65	29	84							
A430C75-75	75	36	100							
A430C80-75	80	42	120							
A430C90-75	90	58	160							
A430C100-75	100	66	180							

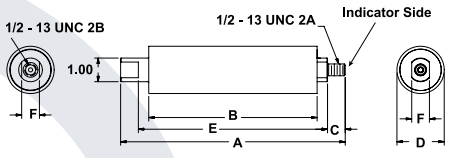

Type 15

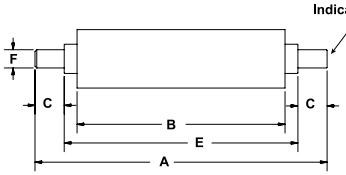

Type 70

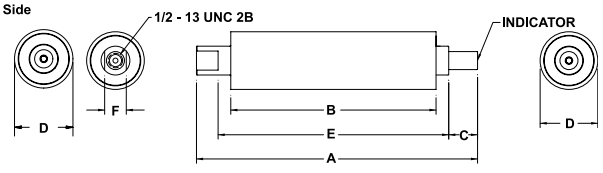

Type 75

For the most current product performance data visit us-ferrazshawmut.mersen.com and use catalog search.

Capacitor Protection

Amp-Trap® and 9F60 Series

5.5 kV Capacitor Fuses Amp-Trap Series

Catalog Number	Ampere Rating	Melting I^2t (kA^2s)	Maximum 1 Clearing I^2t (kA^2s)	Maximum 1 Phase Interrupting Rating	Overall Length Inches (mm) A	Tube Length Inches (mm) B	Ind. Housing Inches (mm) C	Body Dia Inches (mm) D	Bracket Dimensions Inches (mm) E	F
5.5 kV Max Type 15 external female to bolt										
A550C6-15	6	0.4	2.49							
A550C8-15	8	0.73	4.31							
A550C10-15	10	1.14	6.38							
A550C12-15	12	1.6	8.64							
A550C18-15	18	3	15	65 kA @ 5500V						
A550C20-15	20	4.5	22.1	RMS Sym						
A550C25-15	25	6.5	31.2		9.50 (241.3)	7.12 (180.8)	.75 (19.1)	2.00 (50.8)	8.00 (203.2)	.75 (19.1)
A550C30-15	30	7.7	36.2							
A550C35-15	35	9	41.4							
A550C40-15	40	12	54.6							
A550C50-15	50	15	68	50 kA @ 5500V						
A550C65-15	65	35	156	RMS Sym						
A550C75-15	75	43	186							
5.5 kV Max Type 70 tube to tube										
A550C6-70	6	0.4	2.49							
A550C8-70	8	0.73	4.31							
A550C10-70	10	1.14	6.38							
A550C12-70	12	1.6	8.64							
A550C18-70	18	3	15	65 kA @ 5500V						
A550C20-70	20	4.5	22.1	RMS Sym						
A550C25-70	25	6.5	31.2		10.00 (254.0)	7.12 (180.8)	1.00 (25.4)	2.00 (50.8)	8.00 (203.2)	.63 (15.9)
A550C30-70	30	7.7	36.2							
A550C35-70	35	9	41.4							
A550C40-70	40	12	54.6							
A550C50-70	50	15	68							
A550C65-70	65	35	156	50 kA @ 5500V RMS Sym						
A550C75-70	75	43	186							

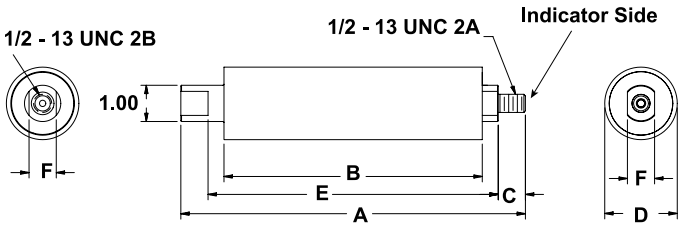

Type 15

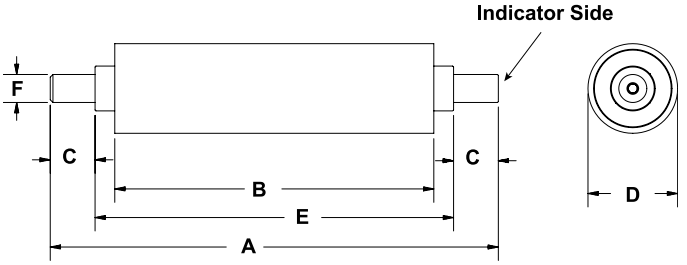

Type 70

Capacitor Protection
Amp-Trap® and 9F60 Series

5.5kV / 9.52kV Capacitor Fuses Amp-Trap Series

5.5kV Capacitor Fuses - Amp-Trap Series

Catalog Number	Ampere Rating	Melting I^2t (kA^2s)	Maximum Clearing I^2t (kA^2s)	Maximum 1 Phase Interrupting Rating (kA)	Overall Length Inches (mm) A	Tube Length Inches (mm) B	Indicator Housing Inches (mm) C	Body Dia Inches (mm) D	Inches (mm) E	Inches (mm) F
5.5 kV Max Type 75 external female to tube										
A550C6-75	6	0.4	2.49	65 kA @ 5500V RMS Sym	9.75 (247.7)	7.12 (180.8)	1.00 (2.54)	2.00 (50.8)	8.00 (203.2)	0.63 (15.9)
A550C8-75	8	0.73	4.31							
A550C10-75	10	1.14	6.38							
A550C12-75	12	1.6	8.64							
A550C18-75	18	3	15							
A550C20-75	20	4.5	22.1							
A550C25-75	25	6.5	31.2							
A550C30-75	30	7.7	36.2							
A550C35-75	35	9	41.4							
A550C40-75	40	12	54.6							
A550C50-75	50	15	68							
A550C65-75	65	35	156	50 kA @ 5500V RMS Sym						
A550C75-75	75	43	186							

Type 75

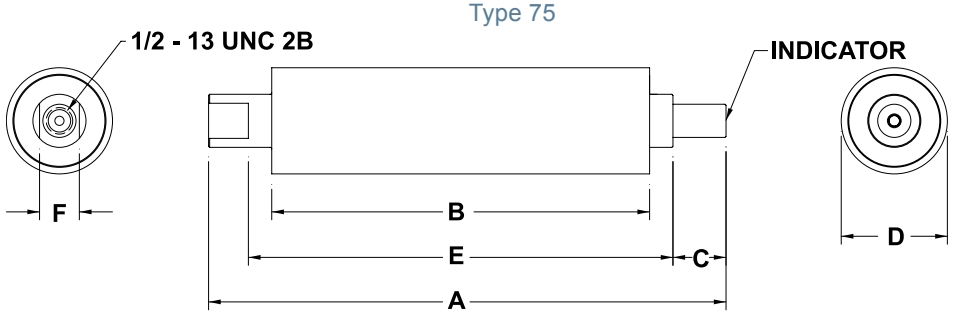

5.5kV Capacitor fuses – 9F60 series, EJO-5

12” (305 mm) Clip Centers clip-in mounting* - Suitable for use indoors or outdoors

Catalog No.	Amp Rating	No. of Barrels	Indicating	Diameter Inches (mm)	Length Inches (mm)	Max Voltage	Max IR RMS Sym
9F60RJD025	25A	1	Yes	2.08 (20.8)	14.0 (356)	5.5 kV	50kA
9F60RJD040	40A						
9F60RJD080	80A						

9.52kV Capacitor fuses – 9F60 series, EJO-5

12” (305 mm) Clip Centers clip-in mounting* - Suitable for use indoors or outdoors

Catalog No.	Amp Rating	No. of Barrels	Indicating	Diameter Inches (mm)	Length Inches (mm)	Max Voltage	Max IR RMS Sym
9F60RJF015	15A	1	Yes	2.08 (20.8)	14.0 (356)	9.25 kV	50kA
9F60RJF025	25A						
9F60RJF040	40A						

**EJO-5 Capacitor fuses are typically mounted directly on the capacitor.*

Distribution Transformer Protection

Sure Guard 9F59U Series ETP Fuses

8.3kV / 15.5kV / 23.0kV ETP fuses

The Sure Guard ETP back-up current-limiting fuses are designed to protect distribution transformers and are used in series with another protective device (such as an expulsion fuse). This combination limits the high-fault current to a safe level, thus providing protection through the complete range. As its name implies, the “ETP” is for External Transformer Protection. For conventional transformers protected by expulsion-fuses cutouts, the ETP can be installed in series with the cutout. For self protected transformers, the ETP can be applied on the high-voltage bushing in series with the internal transformer expulsion fuse.



Features/Benefits:

- Various hardware options.
- Current-limiting for superior equipment protection.
- High fault current interrupting capability: I.R. Sym = 50kA at ETP voltage rating.

Highlights:

- Outdoor use

Applications:

- Overhead distribution systems

Ratings:

9F50UBC:
Volts : 8.3kV AC
9F50UBD:
Volts : 15.5kV AC
9F50UBE:
Volts : 23.0kV AC

Definitions:

Back-up Current-Limiting Fuses:

A back-up current-limiting fuse is a fuse that can interrupt any current between its rated minimum interrupting current and its maximum interrupting current. Back-up fuses are not designed or intended to open under overload conditions.

Hardware Options:

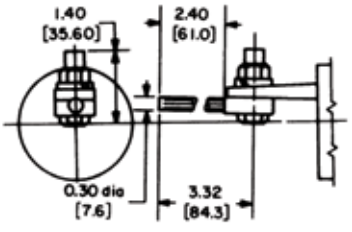

Fig. 1. Adapter only
9F59AAW007

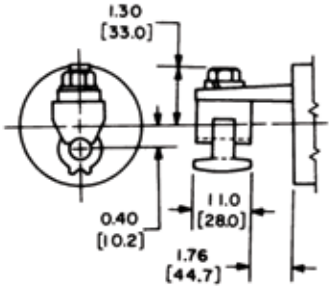

Fig. 2. Eyebolt only,
for 6-2/0 cable
9F59AAW008

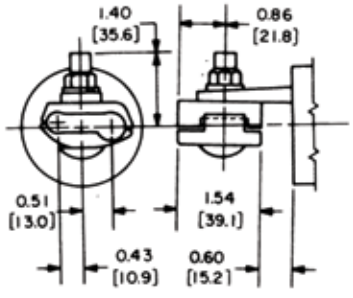

Fig. 3. Parallel groove only,
for 2/0 to 250MCM cable
9F59AAW009

Catalog No. Suitable for Parallel Application	
Catalog Number	**Max kV**
9F59UBC208	8.3
9F59UBC218	8.3
9F59UBC228	8.3
9F59UBC238	8.3
9F59UBC248	8.3
9F59UBC258	8.3
9F59UBC268	8.3
9F59UBC278	8.3
9F59UBC288	8.3
9F59UBD208	15.5
9F59UBD218	15.5
9F59UBD228	15.5
9F59UBD238	15.5
9F59UBD248	15.5
9F59UBD258	15.5
9F59UBD268	15.5
9F59UBD278	15.5
9F59UBD288	15.5

Distribution Transformer Protection

Sure Guard 9F59U Series ETP Fuses

Sure Guard rated 8.3kV

Catalog No.	ETP Rating	ETP Hardware	Minimum kV Class	Recommended Max. Expulsion	Max. Total I^2t	I.C. Amperes	Min. Melt Curve	Total Clear Curve	Let-through Curve
9F59UBC101	8.3, Spade & Stud	Without Hardware	15	8T or 12K	16000	440	GES-8228A	GES-8229A	GET-6693A
9F59UBC111	8.3, Spade & Stud	(1) Adapter	15	8T or 12K	16000	440	GES-8228A	GES-8229A	GET-6693A
9F59UBC121	8.3, Spade & Stud	(1) Eyebolt Terminal	15	8T or 12K	16000	440	GES-8228A	GES-8229A	GET-6693A
9F59UBC131	8.3, Spade & Stud	(1) Parallel Groove	15	8T or 12K	16000	440	GES-8228A	GES-8229A	GET-6693A
9F59UBC201	8.3, Spade & Spade	Without Hardware	15	8T or 12K	16000	440	GES-8228A	GES-8229A	GET-6693A
9F59UBC211	8.3, Spade & Spade	(1) Adapter	15	8T or 12K	16000	440	GES-8228A	GES-8229A	GET-6693A
9F59UBC221	8.3, Spade & Spade	(1) Eyebolt Terminal	15	8T or 12K	16000	440	GES-8228A	GES-8229A	GET-6693A
9F59UBC231	8.3, Spade & Spade	(1) Parallel Groove	15	8T or 12K	16000	440	GES-8228A	GES-8229A	GET-6693A
9F59UBC241	8.3, Spade & Spade	Adapter & eyebolt terminal	15	8T or 12K	16000	440	GES-8228A	GES-8229A	GET-6693A
9F59UBC251	8.3, Spade & Spade	Adapter & parallel groove	15	8T or 12K	16000	440	GES-8228A	GES-8229A	GET-6693A
9F59UBC261	8.3, Spade & Spade	Eyebolt terminal & parallel groove	15	8T or 12K	16000	440	GES-8228A	GES-8229A	GET-6693A
9F59UBC271	8.3, Spade & Spade	(2) Eyebolt terminals	15	8T or 12K	16000	440	GES-8228A	GES-8229A	GET-6693A
9F59UBC281	8.3, Spade & Spade	(2) Parallel groove	15	8T or 12K	16000	440	GES-8228A	GES-8229A	GET-6693A
9F59UBC102	8.3, Spade & Stud	Without Hardware	15	15T or 25K	50000	450	GES-8228A	GES-8229A	GET-6693A
9F59UBC112	8.3, Spade & Stud	(1) Adapter	15	15T or 25K	50000	450	GES-8228A	GES-8229A	GET-6693A
9F59UBC122	8.3, Spade & Stud	(1) Eyebolt Terminal	15	15T or 25K	50000	450	GES-8228A	GES-8229A	GET-6693A
9F59UBC132	8.3, Spade & Stud	(1) Parallel Groove	15	15T or 25K	50000	450	GES-8228A	GES-8229A	GET-6693A
9F59UBC202	8.3, Spade & Spade	Without Hardware	15	15T or 25K	50000	450	GES-8228A	GES-8229A	GET-6693A
9F59UBC212	8.3, Spade & Spade	(1) Adapter	15	15T or 25K	50000	450	GES-8228A	GES-8229A	GET-6693A
9F59UBC222	8.3, Spade & Spade	(1) Eyebolt Terminal	15	15T or 25K	50000	450	GES-8228A	GES-8229A	GET-6693A
9F59UBC232	8.3, Spade & Spade	(1) Parallel Groove	15	15T or 25K	50000	450	GES-8228A	GES-8229A	GET-6693A
9F59UBC242	8.3, Spade & Spade	Adapter & eyebolt terminal	15	15T or 25K	50000	450	GES-8228A	GES-8229A	GET-6693A
9F59UBC252	8.3, Spade & Spade	Adapter & parallel groove	15	15T or 25K	50000	450	GES-8228A	GES-8229A	GET-6693A
9F59UBC262	8.3, Spade & Spade	Eyebolt terminal & parallel groove	15	15T or 25K	50000	450	GES-8228A	GES-8229A	GET-6693A
9F59UBC272	8.3, Spade & Spade	(2) Eyebolt terminals	15	15T or 25K	50000	450	GES-8228A	GES-8229A	GET-6693A
9F59UBC282	8.3, Spade & Spade	(2) Parallel groove	15	15T or 25K	50000	450	GES-8228A	GES-8229A	GET-6693A
9F59UBC104	8.3, Spade & Stud	Without Hardware	15	25T or 40K	140000	560	GES-8228A	GES-8229A	GET-6693A
9F59UBC114	8.3, Spade & Stud	(1) Adapter	15	25T or 40K	140000	560	GES-8228A	GES-8229A	GET-6693A
9F59UBC124	8.3, Spade & Stud	(1) Eyebolt Terminal	15	25T or 40K	140000	560	GES-8228A	GES-8229A	GET-6693A
9F59UBC134	8.3, Spade & Stud	(1) Parallel Groove	15	25T or 40K	140000	560	GES-8228A	GES-8229A	GET-6693A
9F59UBC204	8.3, Spade & Spade	Without Hardware	15	25T or 40K	140000	560	GES-8228A	GES-8229A	GET-6693A
9F59UBC214	8.3, Spade & Spade	(1) Adapter	15	25T or 40K	140000	560	GES-8228A	GES-8229A	GET-6693A
9F59UBC224	8.3, Spade & Spade	(1) Eyebolt Terminal	15	25T or 40K	140000	560	GES-8228A	GES-8229A	GET-6693A
9F59UBC234	8.3, Spade & Spade	(1) Parallel Groove	15	25T or 40K	140000	560	GES-8228A	GES-8229A	GET-6693A
9F59UBC244	8.3, Spade & Spade	Adapter & eyebolt terminal	15	25T or 40K	140000	560	GES-8228A	GES-8229A	GET-6693A
9F59UBC254	8.3, Spade & Spade	Adapter & parallel groove	15	25T or 40K	140000	560	GES-8228A	GES-8229A	GET-6693A
9F59UBC264	8.3, Spade & Spade	Eyebolt terminal & parallel groove	15	25T or 40K	140000	560	GES-8228A	GES-8229A	GET-6693A
9F59UBC274	8.3, Spade & Spade	(2) Eyebolt terminals	15	25T or 40K	140000	560	GES-8228A	GES-8229A	GET-6693A
9F59UBC284	8.3, Spade & Spade	(2) Parallel groove	15	25T or 40K	140000	560	GES-8228A	GES-8229A	GET-6693A
9F59UBC208	8.3, Spade & Spade	Without Hardware	15	50T or 80K	88000	1200	GES-8228A	GES-8229A	GET-6693A
9F59UBC218	8.3, Spade & Spade	(1) Adapter	15	50T or 80K	88000	1200	GES-8228A	GES-8229A	GET-6693A
9F59UBC228	8.3, Spade & Spade	(1) Eyebolt Terminal	15	50T or 80K	88000	1200	GES-8228A	GES-8229A	GET-6693A
9F59UBC238	8.3, Spade & Spade	(1) Parallel Groove	15	50T or 80K	88000	1200	GES-8228A	GES-8229A	GET-6693A
9F59UBC248	8.3, Spade & Spade	Adapter & eyebolt terminal	15	50T or 80K	88000	1200	GES-8228A	GES-8229A	GET-6693A
9F59UBC258	8.3, Spade & Spade	Adapter & parallel groove	15	50T or 80K	88000	1200	GES-8228A	GES-8229A	GET-6693A
9F59UBC268	8.3, Spade & Spade	Eyebolt terminal & parallel groove	15	50T or 80K	88000	1200	GES-8228A	GES-8229A	GET-6693A
9F59UBC278	8.3, Spade & Spade	(2) Eyebolt terminals	15	50T or 80K	88000	1200	GES-8228A	GES-8229A	GET-6693A
9F59UBC288	8.3, Spade & Spade	(2) Parallel groove	15	50T or 80K	88000	1200	GES-8228A	GES-8229A	GET-6693A

For the most current product performance data visit us-ferrazshawmut.mersen.com and use catalog search.

Distribution Transformer Protection

Sure Guard 9F59U Series ETP Fuses

Sure Guard rated 15.5kV

Catalog No.	ETP Rating	ETP Hardware	Min kV Class	Recommended Max. Expulsion	Max. Total I^2t	I.C. Amperes	Min. Melt Curve	Total Clear Curve	Let-through Curve
9F59UBD101	15.5, Spade & Stud	Without Hardware	25	8T or 12K	16000	510	GES-8228A	GES-8229A	GET-6693A
9F59UBD111	15.5, Spade & Stud	(1) Adapter	25	8T or 12K	16000	510	GES-8228A	GES-8229A	GET-6693A
9F59UBD121	15.5, Spade & Stud	(1) Eyebolt Terminal	25	8T or 12K	16000	510	GES-8228A	GES-8229A	GET-6693A
9F59UBD131	15.5, Spade & Stud	(1) Parallel Groove	25	8T or 12K	16000	510	GES-8228A	GES-8229A	GET-6693A
9F59UBD201	15.5, Spade & Spade	Without Hardware	25	8T or 12K	16000	510	GES-8228A	GES-8229A	GET-6693A
9F59UBD211	15.5, Spade & Spade	(1) Adapter	25	8T or 12K	16000	510	GES-8228A	GES-8229A	GET-6693A
9F59UBD221	15.5, Spade & Spade	(1) Eyebolt Terminal	25	8T or 12K	16000	510	GES-8228A	GES-8229A	GET-6693A
9F59UBD231	15.5, Spade & Spade	(1) Parallel Groove	25	8T or 12K	16000	510	GES-8228A	GES-8229A	GET-6693A
9F59UBD241	15.5, Spade & Spade	Adapter & eyebolt terminal	25	8T or 12K	16000	510	GES-8228A	GES-8229A	GET-6693A
9F59UBD251	15.5, Spade & Spade	Adapter & parallel groove	25	8T or 12K	16000	510	GES-8228A	GES-8229A	GET-6693A
9F59UBD261	15.5, Spade & Spade	Eyebolt terminal & parallel groove	25	8T or 12K	16000	510	GES-8228A	GES-8229A	GET-6693A
9F59UBD271	15.5, Spade & Spade	(2) Eyebolt terminals	25	8T or 12K	16000	510	GES-8228A	GES-8229A	GET-6693A
9F59UBD102	15.5, Spade & Stud	Without Hardware	25	15T or 25K	50000	480	GES-8228A	GES-8229A	GET-6693A
9F59UBD112	15.5, Spade & Stud	(1) Adapter	25	15T or 25K	50000	480	GES-8228A	GES-8229A	GET-6693A
9F59UBD122	15.5, Spade & Stud	(1) Eyebolt Terminal	25	15T or 25K	50000	480	GES-8228A	GES-8229A	GET-6693A
9F59UBD132	15.5, Spade & Stud	(1) Parallel Groove	25	15T or 25K	50000	480	GES-8228A	GES-8229A	GET-6693A
9F59UBD202	15.5, Spade & Spade	Without Hardware	25	15T or 25K	50000	480	GES-8228A	GES-8229A	GET-6693A
9F59UBD212	15.5, Spade & Spade	(1) Adapter	25	15T or 25K	50000	480	GES-8228A	GES-8229A	GET-6693A
9F59UBD222	15.5, Spade & Spade	(1) Eyebolt Terminal	25	15T or 25K	50000	480	GES-8228A	GES-8229A	GET-6693A
9F59UBD232	15.5, Spade & Spade	(1) Parallel Groove	25	15T or 25K	50000	480	GES-8228A	GES-8229A	GET-6693A
9F59UBD242	15.5, Spade & Spade	Adapter & eyebolt terminal	25	15T or 25K	50000	480	GES-8228A	GES-8229A	GET-6693A
9F59UBD252	15.5, Spade & Spade	Adapter & parallel groove	25	15T or 25K	50000	480	GES-8228A	GES-8229A	GET-6693A
9F59UBD262	15.5, Spade & Spade	Eyebolt terminal & parallel groove	25	15T or 25K	50000	480	GES-8228A	GES-8229A	GET-6693A
9F59UBD272	15.5, Spade & Spade	(2) Eyebolt terminals	25	15T or 25K	50000	480	GES-8228A	GES-8229A	GET-6693A
9F59UBD282	15.5, Spade & Spade	(2) Parallel groove	25	15T or 25K	50000	480	GES-8228A	GES-8229A	GET-6693A
9F59UBD104	15.5, Spade & Stud	Without Hardware	25	25T or 40K	140000	890	GES-8228A	GES-8229A	GET-6693A
9F59UBD114	15.5, Spade & Stud	(1) Adapter	25	25T or 40K	140000	890	GES-8228A	GES-8229A	GET-6693A
9F59UBD124	15.5, Spade& Stud	(1) Eyebolt Terminal	25	25T or 40K	140000	890	GES-8228A	GES-8229A	GET-6693A
9F59UBD134	15.5, Spade & Stud	(1) Parallel Groove	25	25T or 40K	140000	890	GES-8228A	GES-8229A	GET-6693A
9F59UBD204	15.5, Spade & Spade	Without Hardware	25	25T or 40K	140000	890	GES-8228A	GES-8229A	GET-6693A
9F59UBD214	15.5, Spade & Spade	(1) Adapter	25	25T or 40K	140000	890	GES-8228A	GES-8229A	GET-6693A
9F59UBD224	15.5, Spade & Spade	(1) Eyebolt Terminal	25	25T or 40K	140000	890	GES-8228A	GES-8229A	GET-6693A
9F59UBD234	15.5, Spade & Spade	(1) Parallel Groove	25	25T or 40K	140000	890	GES-8228A	GES-8229A	GET-6693A
9F59UBD244	15.5, Spade & Spade	Adapter & eyebolt terminal	25	25T or 40K	140000	890	GES-8228A	GES-8229A	GET-6693A
9F59UBD254	15.5, Spade & Spade	Adapter & parallel groove	25	25T or 40K	140000	890	GES-8228A	GES-8229A	GET-6693A
9F59UBD264	15.5, Spade & Spade	Eyebolt terminal & parallel groove	25	25T or 40K	140000	890	GES-8228A	GES-8229A	GET-6693A
9F59UBD274	15.5, Spade & Spade	(2) Eyebolt terminals	25	25T or 40K	140000	890	GES-8228A	GES-8229A	GET-6693A
9F59UBD284	15.5, Spade & Spade	(2) Parallel groove	25	25T or 40K	140000	890	GES-8228A	GES-8229A	GET-6693A
9F59UBD208	15.5, Spade & Spade	Without Hardware	25	50T or 80K	88000	1200	GES-8228A	GES-8229A	GET-6693A
9F59UBD218	15.5, Spade & Spade	(1) Adapter	25	50T or 80K	88000	1200	GES-8228A	GES-8229A	GET-6693A
9F59UBD228	15.5, Spade & Spade	(1) Eyebolt Terminal	25	50T or 80K	88000	1200	GES-8228A	GES-8229A	GET-6693A
9F59UBD238	15.5, Spade & Spade	(1) Parallel Groove	25	50T or 80K	88000	1200	GES-8228A	GES-8229A	GET-6693A
9F59UBD248	15.5, Spade & Spade	Adapter & eyebolt terminal	25	50T or 80K	88000	1200	GES-8228A	GES-8229A	GET-6693A
9F59UBD258	15.5, Spade & Spade	Adapter & parallel groove	25	50T or 80K	88000	1200	GES-8228A	GES-8229A	GET-6693A
9F59UBD268	15.5, Spade & Spade	Eyebolt terminal & parallel groove	25	50T or 80K	88000	1200	GES-8228A	GES-8229A	GET-6693A
9F59UBD278	15.5, Spade & Spade	(2) Eyebolt terminals	25	50T or 80K	88000	1200	GES-8228A	GES-8229A	GET-6693A
9F59UBD288	15.5, Spade & Spade	(2) Parallel groove	25	50T or 80K	88000	1200	GES-8228A	GES-8229A	GET-6693A

Distribution Transformer Protection

Sure Guard 9F59U Series ETP Fuses

Sure Guard rated 23.0kV

Catalog No.	ETP Rating	ETP Hardware	kV Class	Recommended Max. Expulsion	Max. Total I^2t	Minimum I.C. Amperes	Min. Melt Curve	Total Clear Curve	Let-through Curve
9F59UBE101	23.0, Spade & Stud	Without Hardware	35	8T or 12K	16000	280	GES-8228A	GES-8229A	GET-6693A
9F59UBE111	23.0, Spade & Stud	(1) Adapter	35	8T or 12K	16000	280	GES-8228A	GES-8229A	GET-6693A
9F59UBE121	23.0, Spade & Stud	(1) Eyebolt Terminal	35	8T or 12K	16000	280	GES-8228A	GES-8229A	GET-6693A
9F59UBE131	23.0, Spade & Stud	(1) Parallel Groove	35	8T or 12K	16000	280	GES-8228A	GES-8229A	GET-6693A
9F59UBE201	23.0, Spade & Spade	Without Hardware	35	8T or 12K	16000	280	GES-8228A	GES-8229A	GET-6693A
9F59UBE211	23.0, Spade & Spade	(1) Adapter	35	8T or 12K	16000	280	GES-8228A	GES-8229A	GET-6693A
9F59UBE221	23.0, Spade & Spade	(1) Eyebolt Terminal	35	8T or 12K	16000	280	GES-8228A	GES-8229A	GET-6693A
9F59UBE231	23.0, Spade & Spade	(1) Parallel Groove	35	8T or 12K	16000	280	GES-8228A	GES-8229A	GET-6693A
9F59UBE241	23.0, Spade & Spade	Adapter & eyebolt terminal	35	8T or 12K	16000	280	GES-8228A	GES-8229A	GET-6693A
9F59UBE251	23.0, Spade & Spade	Adapter & parallel groove	35	8T or 12K	16000	280	GES-8228A	GES-8229A	GET-6693A
9F59UBE261	23.0, Spade & Spade	Eyebolt terminal & parallel groove	35	8T or 12K	16000	280	GES-8228A	GES-8229A	GET-6693A
9F59UBE271	23.0, Spade & Spade	(2) Eyebolt terminals	35	8T or 12K	16000	280	GES-8228A	GES-8229A	GET-6693A
9F59UBE281	23.0, Spade & Spade	(2) Parallel groove	35	8T or 12K	16000	280	GES-8228A	GES-8229A	GET-6693A
9F59UBE102	23.0, Spade & Stud	Without Hardware	35	15T or 25K	70000	460	GES-8228A	GES-8229A	GET-6693A
9F59UBE112	23.0, Spade & Stud	(1) Adapter	35	15T or 25K	70000	460	GES-8228A	GES-8229A	GET-6693A
9F59UBE122	23.0, Spade & Stud	(1) Eyebolt Terminal	35	15T or 25K	70000	460	GES-8228A	GES-8229A	GET-6693A
9F59UBE132	23.0, Spade & Stud	(1) Parallel Groove	35	15T or 25K	70000	460	GES-8228A	GES-8229A	GET-6693A
9F59UBE202	23.0, Spade & Spade	Without Hardware	35	15T or 25K	70000	460	GES-8228A	GES-8229A	GET-6693A
9F59UBE212	23.0, Spade & Spade	(1) Adapter	35	15T or 25K	70000	460	GES-8228A	GES-8229A	GET-6693A
9F59UBE222	23.0, Spade & Spade	(1) Eyebolt Terminal	35	15T or 25K	70000	460	GES-8228A	GES-8229A	GET-6693A
9F59UBE232	23.0, Spade & Spade	(1) Parallel Groove	35	15T or 25K	70000	460	GES-8228A	GES-8229A	GET-6693A
9F59UBE242	23.0, Spade & Spade	Adapter & eyebolt terminal	35	15T or 25K	70000	460	GES-8228A	GES-8229A	GET-6693A
9F59UBE252	23.0, Spade & Spade	Adapter & parallel groove	35	15T or 25K	70000	460	GES-8228A	GES-8229A	GET-6693A
9F59UBE262	23.0, Spade & Spade	Eyebolt terminal & parallel groove	35	15T or 25K	70000	460	GES-8228A	GES-8229A	GET-6693A
9F59UBE272	23.0, Spade & Spade	(2) Eyebolt terminals	35	15T or 25K	70000	460	GES-8228A	GES-8229A	GET-6693A
9F59UBE282	23.0, Spade & Spade	(2) Parallel groove	35	15T or 25K	70000	460	GES-8228A	GES-8229A	GET-6693A

IEC Standard Back-Up Fuse-Links

3 / 7.2 kV – 6 / 12 kV – 10 / 17.5 kV – 10 / 24 kV – 20 / 36 kV Ferrule German DIN Standard

Beyond our line of ANSI / IEEE current-limiting fuses, Mersen offers a full line of medium voltage fuse links according to the IEC standards. Among them, the back-up current-limiting fuse-links designed according to IEC 60 282-1 and meeting DIN 43 625 fuse-link dimensions. These fuse-links' operating range is between their minimum interrupting rating (I3) and their maximum interrupting rating (I1). When necessary, we offer these fuses with a controlled power dissipation (CPD) feature. These type CPD fuse-links, prevent overheating of the fuse compartment when installed in conjunction with a load break switch.



Features/Benefits:

- Conform to IEC 60-282-1 which is identical to German standard VDE 0670T4
- Conform to DIN 43 625: High voltage fuse-links rated voltage 3.6 to 36kV (Fuse-link dimensions)
- Blown-fuse indicator: The strikers of the MV fuse-links mentioned here have an effective length of 27mm and are a "medium type." This classification results from the energy released by the striker during the first 20 mm of operating distance. The initial force is about 80N and the force at the end of the course (27mm) is 15N.

Highlights:

- Outdoor use
- High breaking capacity
- High current limitation

Applications:

- Protection of transformers and distribution systems.

Ratings:

Size (L) 192:
Volts : 3/7.2kV AC
Amps : 2A to 200A
Size (L) 292:
Volts : 6/12kV AC
Amps : 1A to 200A
Size (L) 367:
Volts : 10/17.5kV AC
Amps : 6.3A to 100A
Size (L) 442:
Volts : 10/24kV AC
Amps : 1A to 200A
Size (L) 537:
Volts : 20/36kV AC
Amps : 2A to 63A
Size (L) 292:
Volts : 6/12kV AC
Amps : 1A to 200A with CPD
Size (L) 442:
Volts : 10/24kV AC
Amps : 1A to 125A with CPD

Definitions:

Back-up Fuse-links: Back-up fuse links have a rated minimum breaking capacity current above which the fuses are able to interrupt current. Back-up fuses are not designed to operate below their minimum breaking current (below I3). Their operating range is between their minimum interrupting rating (I3) and their maximum interrupting rating (I1). If protection is required for currents below I3, additional protection must be provided.

Rated Voltage Range: Medium voltage fuse links must operate at the voltage range for which they have been rated. When a current-limiting fuse clears a fault, the element melts and an arc is formed across the gap. The higher the fuse voltage rating, the higher the arc voltage will be and it will always be greater than the voltage rating of the fuse. Replacing a fuse in equipment with a fuse of a higher voltage rating can be destructive for the equipment. The rated voltage range provides the permissible voltage limits top and bottom the fuse can be used at.

Breaking Capacity I1: The breaking capacity is also referred to as the "rated maximum breaking current". This is the maximum current which can be interrupted by the fuse-link.



Definitions - Continued:

Minimum Breaking Capacity I3:

The minimum breaking current is referred to as the “rated minimum breaking current”. Back up fuses are not designed or intended to open below I3.

Control Power Dissipation:

Due to abnormal circumstances such as lightening strikes or atypical transformer inrush, some of the fuse elements can be damaged. The remaining elements will have to carry more current causing the fuse to dissipate significantly more heat. When these fuses are enclosed in a narrow fuse compartment that has limited thermal power acceptance, there is risk this may be exceeded. Type CPD fuse-links prevent such overheating. The CPD striker system releases the transformer switch before the permissible power acceptance of the fuse compartment is exceeded. The fuse should then be replaced.

Accessories:

Mersen offers clips, indoor and outdoor fuse supports along with signaling systems:

Fuse clips:

Size 45mm with connection lug: Cat # MR45R

Size 45mm without the connection lug: Cat # MR55R

Flexible microswitch voltage range 12 / 36 kV:

1 NO/NC Ref # E092855

2 NO/NC Ref # F092856

Indoor and Outdoor Fuse Support:

	Catalog No.	Voltage (kV)	Size L (mm)	Dielectric Whithstand (phase to ground)		Dimensions					
				50 Hz - 1min kV RMS	1.2/50µs peak voltage	A	B	C	D	E	F
Indoor	SI72V192	7.2	192	20	60	400	226	322	347	175	270
	SI120V292	12	292	28	75	424	324	200	445	175	270
	SI175V292	17.5	292	38	95	424	324	200	445	220	315
	SI175/367	17.5	367	38	95	576	401	270	522	218	313
	SI240V442	24	442	50	125	576	476	270	597	270	365
	SI360V537	36	537	70	170	670	570	350	691	354	449
outdoor	SE120V292	12	292	28	75	424	324	200	445	261	356
	SE175V292	17.5	292	38	95	424	324	200	445	261	356
	SE175V367	17.5	367	38	95	576	401	270	521	263	358
	SE240V442	24	442	50	125	576	476	270	597	309	404
	SE360V537	36	537	70	170	670	570	350	691	381	476



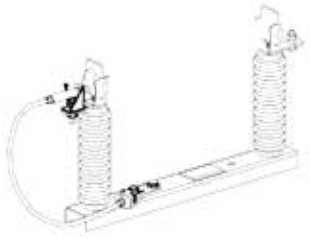

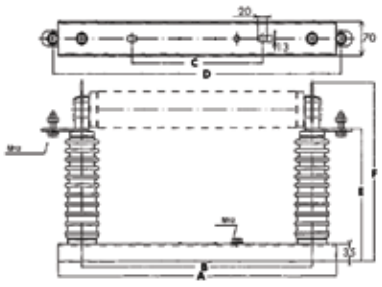

IEC Standard Back-Up Fuse-Links

3 / 7.2 kV – 6 / 12 kV – 10 / 17.5 kV – 10 / 24 kV – 20 / 36 kV
Ferrule German DIN Standard

3 / 7.2 kV Rated Voltage Range – Back-up with Striker
Size: L = 192mm

Catalog No.	Ref #	I_N (A)	D (mm)	Maximum breaking current I1 (kA)	Minimum breaking current I3 (A)	Weight (kg)
45DB72V2P	N1000098	2	56	63	15	1.1
45DB72V4P	P1000099	4	56	63	20	1.1
45DB72V6,3PD	S209293	6.3	56	63	20	1.1
45DB72V10PD	T209294	10	56	63	35	1.1
45DB72V16PD	V209295	16	56	63	64	1.1
45DB72V20PD	W209296	20	56	63	80	1.1
45DB72V25PD	X209297	25	56	63	95	1.1
45DB72V32PD	Y209298	31.5	56	63	110	1.1
45DB72V40PD	Z209299	40	56	63	134	1.1
45DB72V50PD	A209300	50	56	63	190	1.1
45DB72V63P	B209301	63	65	63	220	1.4
45DB72V80P	C209302	80	65	63	300	1.4
45DB72V100P	D209303	100	65	63	350	1.4
45DB72V125PD	Q1000100	125	88	63	435	2.4
45DB72V160P	R1000101	160	88	63	500	2.4
45DB72V200P	S1000102	200	88	63	610	2.4

Indoor fuse support: SI72V192

6 / 12 kV Rated Voltage Range – Back-up with Striker
Size: L = 292mm

Catalog No.	Ref #	I_N (A)	D (mm)	Maximum breaking current I1 (kA)	Minimum breaking current I3 (A)	Weight (kg)
45DB120V1P	T1000103	1	56	63	14	1.7
45DB120V2P	V1000104	2	56	63	16	1.7
45DB120V4P	W1000105	4	56	63	22	1.7
45DB120V6,3P	F209305	6.3	56	63	30	1.7
45DB120V10P	G209306	10	56	63	42	1.7
45DB120V16P	H209307	16	56	63	54	1.7
45DB120V20P	J209308	20	56	63	73	1.7
45DB120V25P	K209309	25	56	63	93	1.7
45DB120V32P	L209310	31.5	56	63	105	1.7
45DB120V40P	M209311	40	56	63	125	1.7
45DB120V50P	N209312	50	56	63	160	1.7
45DB120V63P	P209313	63	56	63	230	1.7
45DB120V80P	Q209314	80	65	63	350	2.1
45DB120V100P	R209315	100	65	63	500	3.1
45DB120V125P	X1000106	125	88	63	480	3.7
45DB120V160P	Y1000107	160	88	63	560	3.7
45DB120V200P	Z1000108	200	88	63	610	3.7

Indoor fuse support: SI120V292 Outdoor fuse support: SE120V292

IEC Standard Back-Up Fuse-Links

10 / 17.5 kV Rated Voltage Range – Back-up with Striker Size: L = 367mm

Catalog No.	Ref #	I_N (A)	D (mm)	Maximum breaking current I1 (kA)	Minimum breaking current I3 (A)	Weight (kg)
45DB175V6,3P	V1000564	6.3	56	63	30	2.1
45DB175V10P	W1000565	10	56	63	43	2.1
45DB175V16P	X1000566	16	56	63	54	2.1
45DB175V20P	Y1000567	20	56	63	73	2.1
45DB175V25P	Z1000568	25	56	63	93	2.1
45DB175V32P	A1000569	31.5	56	63	105	2.1
45DB175V40P	B1000570	40	56	63	125	2.1
45DB175V50P	C1000571	50	56	63	205	2.1
45DB175V63P	D1000572	63	56	63	280	2.1
45DB175V80P	E1000573	80	65	63	350	2.6
45DB175V100P	F1000574	100	88	63	500	3.5

Indoor fuse support: SI175V367 Outdoor fuse support: SE175V367

10 / 24 kV Rated Voltage Range – Back-up with Striker Size: L = 442mm

Catalog No.	Ref #	I_N (A)	D (mm)	Maximum breaking current I1 (kA)	Minimum breaking current I3 (A)	Weight (kg)
45DB240V1P	A1000109	1	56	63	14	2.5
45DB240V2P	B1000110	2	56	63	16	2.5
45DB240V4P	C1000111	4	56	63	23	2.5
45DB240V6,3P	S209339	6.3	56	63	30	2.5
45DB240V10P	T209340	10	56	63	43	2.5
45DB240V16P	V209341	16	56	63	54	2.5
45DB240V20P	W209342	20	56	63	73	2.5
45DB240V25P	X209343	25	56	63	93	2.5
45DB240V32P	Y209344	31.5	56	63	105	2.5
45DB240V40P	Z209345	40	56	63	125	2.5
45DB240V50P	A209346	50	56	63	205	2.5
45DB240V63P	B209347	63	56	63	280	2.5
45DB240V80P	C209348	80	65	63	310	3.1
45DB240V100P	D209349	100	78	63	430	4.2
45DB240V125P	D1000112	125	88	40	760	5.9
45DB240V160P	E1000113	160	88	31.5	900	5.9
45DB240V200P	F1000114	200	88	31.5	1050	5.9

Indoor fuse support: SI240V442 Outdoor fuse support: SE240V442

20 / 36 kV Rated Voltage Range – Back-up with Striker Size: L = 537mm

Catalog No.	Ref #	I_N (A)	D (mm)	Maximum breaking current I1 (kA)	Minimum breaking current I3 (A)	Weight (kg)
45DB360V2P	G1000115	2	56	31.5	15	2.7
45DB360V4P	H1000116	4	56	31.5	20	2.7
45DB360V6,3PD	S209362	6.3	56	31.5	20	2.7
45DB360V10PD	T209363	10	56	31.5	33	2.7
45DB360V16PD	V209364	16	56	31.5	66	2.7
45DB360V20PD	W209365	20	56	31.5	95	2.7
45DB360V25PD	X209366	25	56	31.5	110	2.7
45DB360V32PD	Y209367	31.5	65	31.5	135	3.7
45DB360V40PD	Z209368	40	65	20	200	3.7
45DB360V50PD	J1000117	50	88	20	220	6.5
45DB360V63PD	K1000118	63	88	20	280	6.5

Indoor fuse support: SI360V537 Outdoor fuse support: SE360V537

IEC Standard Back-Up Fuse-Links

6 / 12 kV – 10 / 24 kV
Ferrule German DIN standard with Control Power Dissipation (CPD) striker system

6 / 12 kV Rated Voltage Range – Back-up with CPD Striker Size: L = 292mm

Catalog No.	Ref #	I_N (A)	D (mm)	Maximum breaking current I1 (kA)	Minimum breaking current I3 (A)	Weight (kg)
45DB120V1PT	L1000119	1	56	63	14	1.6
45DB120V2PT	M1000120	2	56	63	16	1.6
45DB120V4PT	N1000121	4	56	63	22	1.6
45DB120V6,3PT	P1000122	6.3	56	63	30	1.6
45DB120V10PT	Q1000123	10	56	63	42	1.6
45DB120V16PT	R1000124	16	56	63	54	1.6
45DB120V20PT	S1000125	20	56	63	73	1.6
45DB120V25PT	T1000126	25	56	63	93	1.6
45DB120V32PT	V1000127	31.5	56	63	105	1.6
45DB120V40PT	W1000128	40	56	63	125	1.6
45DB120V50PT	X1000129	50	56	63	160	1.6
45DB120V63PT	Y1000130	63	56	63	230	1.6
45DB120V80PT	Z1000131	80	65	63	350	2.1
45DB120V100PT	A1000132	100	65	63	500	2.1
45DB120V125PT	B1000133	125	88	63	480	3.7
45DB120V160PT	C1000134	160	88	63	560	3.7
45DB120V200PT	D1000135	200	88	63	610	3.7

Indoor fuse support: SI120V292 Outdoor fuse support: SE120V292

10 / 24 kV Rated Voltage Range – Back-up with CPD Striker Size: L = 442mm

Catalog No.	Ref #	I_N (A)	D (mm)	Maximum breaking current I1 (kA)	Minimum breaking current I3 (A)	Weight (kg)
45DB240V1PT	E1000136	1	56	63	14	2.3
45DB240V2PT	F1000137	2	56	63	16	2.3
45DB240V4PT	G1000138	4	56	63	23	2.3
45DB240V6,3PT	H1000139	6.3	56	63	30	2.3
45DB240V10PT	J1000140	10	56	63	43	2.3
45DB240V16PT	K1000141	16	56	63	54	2.3
45DB240V20PT	L1000142	20	56	63	73	2.3
45DB240V25PT	M1000143	25	56	63	93	2.3
45DB240V32PT	N1000144	31.5	56	63	105	2.3
45DB240V40PT	P1000145	40	56	63	125	2.3
45DB240V50PT	Q1000146	50	56	63	205	2.3
45DB240V63PT	R1000147	63	56	63	280	2.3
45DB240V80PT	S1000148	80	65	63	310	3.1
45DB240V100PT	T1000149	100	78	63	430	4.1
45DB240V125PT	V1000150	125	88	40	760	5.9

Indoor fuse support: SI240V442 Outdoor fuse support: SE240V442

Accessories Type EK 9F61 Series

Fuse supports, fuse disconnect switches and accessories from 2.4kV to 38kV

Fuse supports, non-disconnecting, are used primarily in potential transformer circuits, or where there is some other disconnecting or isolating device in series with the fuse in the circuit. Disconnecting switch devices have the additional feature of serving to isolate the equipment they protect. It should be noted that disconnecting switches are not load-breaking devices, therefore, the circuit must be open prior to the fuse disconnection. Select either a fuse support or a disconnecting switch for each fuse. Fuse supports and disconnecting switches include live parts for both ends. Both fuse supports and fuse disconnect switches can be mounted vertically or horizontally. The type EK are used for indoor installations while the type EKO are used outdoors.

Indoor:

Fuse supports: EK-1
Fuse disconnect switches: EK-3

Outdoor:

Fuse supports: EKO-1
Fuse disconnect switches: EKO-3

Fuse Size	Ferrule Diameter
B	1-9/16 inches
C	2 inches
D	3inches
DD	two-3 inch in parrallel
DDDD	four-3 inch in parrallel
EE	two-4 inch in parrallel

The letter suffix following the (-1) or the (-3) shows the fuse size.

When selecting a mounting for a current-limiting fuse, it is necessary that the clip centers and size agree with the fuse selected.

For further detailed information regarding these fuse supports and disconnecting switches such as storage, mounting and maintenance, please refer to INST-EK39196 available on our website at us-ferrazshawmut.mersen.com or ask your sales representative for a hard copy.

Fuse Support - EK-1 Indoor



EK-1B



EK-1C



EK-1D



EK-1DD



EK-1EE



EK-1DDDD

Refer to drawings for specific dimensions.

Accessories Type EK 9F61 Series

Fuse Support - EK-1 Indoor

Catalog No.	Max. kV	Ferrule Size/ Diam.	Clip Centers	Spare Parts (Live Parts)	Spare Parts (Clips)	Insulator Rating - Class/NEMA Nominal Sys. (kV)	Insulator Rating - BIL (kV)	Insulator Rating - Class/NEMA Tech Ref.
9F61ABB101	2.75/5.5	B/1.56"	8.12"	9F61BNW450	9F61BWW460	4.8	60	A-20
9F61ABG101	8.25	B/1.56"	8.12"	9F61BNW450	9F61BWW460	13.8	95	A-20
9F61ADG101	15.5	B/1.56"	11.5"	9F61BNW450	9F61BWW460	13.8	95	A-20
9F61ADJ101	15.5	B/1.56"	11.5"	9F61BNW450	9F61BWW460	14.4	110	A-20
9F61AAB201	2.75	C/2.00"	7"	9F61BNW451	9F61BWW457	4.8	60	A-20
9F61ACB201	5.5	C/2.00"	9"	9F61BNW451	9F61BWW457	4.8	60	A-20
9F61AEG201	15.5	C/2.00"	12"	9F61BNW451	9F61BWW457	13.8	95	A-20
9F61AGG201	15.5	C/2.00"	15"	9F61BNW451	9F61BWW457	13.8	95	A-20
9F61AGJ201	15.5	C/2.00"	15"	9F61BNW451	9F61BWW457	14.4	110	A-20
9F61AHM201	25.8	C/2.00"	21"	9F61BNW743	9F61BWW457	23	150	A-20
9F61AAB301	2.75	D/3.00"	7"	9F61BNW750	9F61BWW459	4.8	60	A-20
9F61AEB301	2.75/5.5	D/3.00"	12"	9F61BNW750	9F61BWW459	4.8	60	A-20
9F61AEG301	8.25	D/3.00"	12"	9F61BNW750	9F61BWW459	13.8	95	A-20
9F61AGG301	15.5	D/3.00"	15"	9F61BNW750	9F61BWW459	13.8	95	A-20
9F61AGJ301	15.5	D/3.00"	15"	9F61BNW750	9F61BWW459	14.4	110	A-20
9F61AHM301	25.8	D/3.00"	21"	9F61BNW744	9F61BWW459	23	150	A-20
9F61AAB401	2.75	DD/3.00"	7"	9F61BNW751	–	4.8	60	A-20
9F61AEB401	2.75/5.5	DD/3.00"	12"	9F61BNW751	–	4.8	60	A-20
9F61AEG401	8.25	DD/3.00"	12"	9F61BNW751	–	13.8	95	A-20
9F61AGG401	15.5	DD/3.00"	15"	9F61BNW751	–	13.8	95	A-20
9F61AGJ401	15.5	DD/3.00"	15"	9F61BNW751	–	14.4	110	A-20
9F61AHM401	25.8	DD/3.00"	21"	9F61AWW738	–	23	150	A-20
9F61AFB501	5.08	EE/4.00"	14.12"	9F61BNW452	–	4.8	60	A-20
9F61AFG501	15	EE/4.00"	14.12"	9F61BNW452	–	13.8	95	A-20
9F61AFJ501	15	EE/4.00"	14.12"	9F61BNW452	–	14.4	110	A-20
9F61AHG001		DDDD		For Bolted-end Fuses refer to drawings.				
9F61AHJ001		DDDD		For Bolted-end Fuses refer to drawings.				
9F61AKB001		DDDD		For Bolted-end Fuses refer to drawings.				

Accessories Type EK 9F61 Series

Disconnect Switch - EK-3 Indoor



EK-3C



EK-3D



EK-3DD

E

Catalog No.	Max. kV	Ferrule Size/ Diam.	Clip Centers	Spare Parts (Live Parts)	Spare Parts (Clips)	Insulator Rating - Nominal Sys. (kV)	Insulator Rating - BIL (kV)	Insulator Rating - Class/NEMA Tech Ref.
9F61AAB205	2.75	C/2.00"	7"	9F61BNW731	9F61BWW457	4.8	60	A-20
9F61ACB205	5.5	C/2.00"	9"	9F61BNW731	9F61BWW457	4.8	60	A-20
9F61AEG205	15.5	C/2.00"	12"	9F61BNW731	9F61BWW457	13.8	95	A-20
9F61AGG205	15.5	C/2.00"	15"	9F61BNW731	9F61BWW457	13.8	95	A-20
9F61AGJ205	15.5	C/2.00"	15"	9F61BNW731	9F61BWW457	14.4	110	A-20
9F61AHM205	25.8	C/2.00"	21"	9F61BNW746	9F61BWW457	23	150	A-20
9F61AAB305	2.75	D/3.00"	7"	9F61BNW732	9F61BWW459	4.8	60	A-20
9F61AEB305	2.75/5.5	D/3.00"	12"	9F61BNW732	9F61BWW459	4.8	60	A-20
9F61AEG305	8.25	D/3.00"	12"	9F61BNW732	9F61BWW459	13.8	95	A-20
9F61AGG305	15.5	D/3.00"	15"	9F61BNW732	9F61BWW459	13.8	95	A-20
9F61AGJ305	15.5	D/3.00"	15"	9F61BNW732	9F61BWW459	14.4	110	A-20
9F61AHM305	25.8	D/3.00"	21"	9F61BNW747	9F61BWW459	23	150	A-20
9F61AAB405	2.75	DD/3.00"	7"	9F61BNW461	–	4.8	60	A-20
9F61AEB405	2.75/5.5	DD/3.00"	12"	9F61BNW461	–	4.8	60	A-20
9F61AEG405	8.25	DD/3.00"	12"	9F61BNW461	–	13.8	95	A-20
9F61AGG405	15.5	DD/3.00"	15"	9F61BNW461	–	13.8	95	A-20
9F61AGJ405	15.5	DD/3.00"	15"	9F61BNW461	–	14.4	110	A-20
9F61AHM405	25.8	DD/3.00"	21"	9F61BNW748	–	23	150	A-20

Refer to drawings for specific dimensions.

Accessories Type EK 9F61 Series

Fuse Support - EKO-1 Outdoor



EKO-1C



EKO-1D



EKO-1DD



EKO-1DDDD

Catalog No.	Max. kV	Ferrule Size/Diam.	Clip Centers	Spare Parts (Live Parts)	Spare Parts (Clips)	Insulator Rating - Nominal Sys. (kV)	Insulator Rating - BIL (kV)	Insulator Rating - Class/NEMA Tech Ref.
9F61CEF209	2.75/5.5/8.25	C/2.00"	12"	9F61BNW743	9F61BWW457	7.5	95	202
9F61CGL209	15.5	C/2.00"	15"	9F61BNW743	9F61BWW457	15	110	205
9F61CHM209	25.8	C/2.00"	21"	9F61BNW743	9F61BWW457	23	150	208
9F61CEF309	2.75/5.5/8.25	D/3.00"	12"	9F61BNW744	9F61BWW459	7.5	95	202
9F61CGL309	15.5	D/3.00"	15"	9F61BNW744	9F61BWW459	15	110	205
9F61CHM309	25.8	D/3.00"	21"	9F61BNW744	9F61BWW459	23	150	208
9F61CJN309	38	D/3.00"	27"	9F61BNW744	9F61BWW459	34.5	200	210
9F61CEF409	2.75/5.5/8.25	DD/3.00"	12"	9F61AWW738	–	7.5	95	202
9F61CGL409	15.5	DD/3.00"	15"	9F61AWW738	–	15	110	205
9F61CHM409	25.8	DD/3.00"	21"	9F61AWW738	–	23	150	208
9F61CJN409	38	DD/3.00"	27"	9F61AWW738	–	34.5	200	210
9F61CHL009		DDDD	For Bolted-end Fuses refer to drawings.					
9F61CKF009		DDDD	For Bolted-end Fuses refer to drawings.					

Refer to drawings for specific dimensions.

Accessories Type EK 9F61 Series

Disconnect Switch - EKO-3 Outdoor



EKO-3C



EKO-3D Open Position



EKO-3DD

Catalog No.	Max. kV	Ferrule Size/Diam.	Clip Centers	Spare Parts (Live Parts)	Spare Parts (Clips)	Insulator Rating - Nominal Sys. (kV)	Insulator Rating - BIL (kV)	Insulator Rating - Class/NEMA Tech Ref.
9F61CEF210	2.75/5.5/8.25	C/2.00"	12"	9F61BNW746	9F61BWW457	7.5	95	202
9F61CGL210	15.5	C/2.00"	15"	9F61BNW746	9F61BWW457	15	110	205
9F61CGN210	15.5	C/2.00"	15"	9F61BNW746	9F61BWW457	34.5	200	210
9F61CHM210	25.8	C/2.00"	21"	9F61BNW746	9F61BWW457	23	150	208
9F61CEF310	2.75/5.5/8.25	D/3.00"	12"	9F61BNW747	9F61BWW459	7.5	95	202
9F61CGL310	15.5	D/3.00"	15"	9F61BNW747	9F61BWW459	15	110	205
9F61CHM310	25.8	D/3.00"	21"	9F61BNW747	9F61BWW459	23	150	208
9F61CJN310	38	D/3.00"	27"	9F61BNW747	9F61BWW459	34.5	200	210
9F61CEF410	2.75/5.5/8.25	DD/3.00"	12"	9F61BNW748	–	7.5	95	202
9F61CGL410	15.5	DD/3.00"	15"	9F61BNW748	–	15	110	205
9F61CHM410	25.8	DD/3.00"	21"	9F61BNW748	–	23	150	208
9F61CJN410	38	DD/3.00"	27"	9F61BNW748	–	34.5	200	210

Refer to drawings for specific dimensions.

Accessories Type EK 9F61 Series

Accessories and Spare Parts

Hinge Trunions and Operating Eyes for Use on Disconnecting Switches

Fuse Size	Hinge Trunion Model No.	Operating Eye Model No.
C	9F61BJW397	9F61BFW394
D	9F61BKW398	9F61AWW612
DD	9F61BLW399	9F61AWW612



EK-3C
9F61BFW394



EK-3D and DD
9A61AWW612



EKO-3C
9F61BJW397



EKO -3D
9F61BKW398



EKO-3DD
9F61BLW399

Accessories Type EK 9F61 Series

Fuse Size B (Ferrule Diameter 1.5625")

Fuse Supports & Disconnect Switches	Spare Live Parts(*)	Figure (Fig.)	Spare Fuse Clips(**)	Figure (Fig.)	Fuse size
9F61ABB101	9F61BNW450		9F61BWW460		B
9F61ABG101					B
9F61ADG101					B
9F61ADJ101					B

Fuse Size C (Ferrule Diameter 2")

Fuse Supports & Disconnect Switches	Spare Live Parts(*)	Figure (Fig.)	Spare Fuse Clips(**)	Figure (Fig.)	Fuse size
9F61AAB201	9F61BNW451		9F61BWW457		C
9F61ACB201					C
9F61AEG201					C
9F61AGG201					C
9F61AGJ201					C
9F61AAB205	9F61BNW731				C
9F61ACB205					C
9F61AEG205					C
9F61AGG205					C
9F61AGJ205					C
9F61AHM201	9F61BNW743				C
9F61CEF209					C
9F61CGL209					C
9F61CHM209					C
9F61AHM205	9F61BNW746				C
9F61CEF210					C
9F61CGL210					C
9F61CHM210					C

(*) Spare Live Parts: Order (1) Live Parts for each Fuse Support and Disconnecting Switch (includes live parts for both ends).
(**) Fuse Clips: Order (2) Fuse Clips for each Fuse Support and order (1) Fuse Clip for each Disconnecting Switch.

Accessories Type EK 9F61 Series

Fuse Size D (Ferrule Diameter 3")

Fuse Supports & Disconnect Switches	Spare Live Parts(*)	Figure (Fig.)	Spare Fuse Clips(**)	Figure (Fig.)	Fuse size
9F61AAB305	9F61BNW732		9F61BWW459		D
9F61AEB305					D
9F61AEG305					D
9F61AGG305					D
9F61AGJ305					D
9F61AHM301	9F61BNW744				D
9F61CEF309					D
9F61CGL309					D
9F61CHM309					D
9F61CJN309					D
9F61AHM305	9F61BNW747				D
9F61CEF310					D
9F61CGL310					D
9F61CHM310					D
9F61CJN310					D
9F61AAB301	9F61BNW750				D
9F61AEB301					D
9F61AEG301					D
9F61AGG301					D
9F61AGJ301					D

(*) Spare Live Parts: Order (1) Live Parts for each Fuse Support and Disconnecting Switch (includes live parts for both ends).
(**) Fuse Clips: Order (2) Fuse Clips for each Fuse Support and order (1) Fuse Clip for each Disconnecting Switch.

For the 3" ferrule diameter we also offer the Cat # 228-700-530 clips. These spring reinforced clips will accomodate one and two barrel 3-inch diameter medium voltage ferrule type fuses. The clip and reinforcing spring are intended to be bolted to a copper busbar through two .41" and 1.06" slots. A minimum copper-bus section of 1/4" x 1-1/2" is recommended for maximum ratings of 24R and 450E. The Cat # 228-700-530 is for one pair of clips, enough for one fuse.



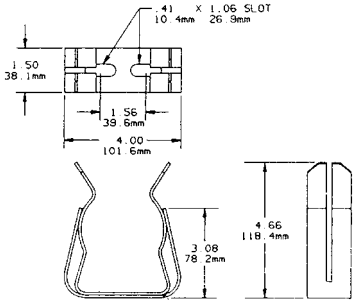

Accessories Type EK 9F61 Series

Fuse Size DD (Ferrule Diameter two 3" in Parallel)

Fuse Supports & Disconnect Switches	Spare Live Parts(*)	Figure (Fig.)	Spare Fuse Clips(**)	Fuse size
9F61AHM401	9F61AWW738	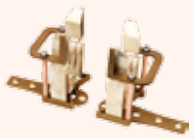	N/A	DD
9F61CEF409				DD
9F61CGL409				DD
9F61CHM409				DD
9F61CJN409				DD
9F61AAB405	9F61BNW461			DD
9F61AEB405				DD
9F61AEG405				DD
9F61AGG405				DD
9F61AGJ405				DD
9F61AHM405	9F61BNW748			DD
9F61CEF410				DD
9F61CGL410				DD
9F61CHM410				DD
9F61CJN410				DD
9F61AAB401	9F61BNW751			DD
9F61AEB401				DD
9F61AEG401				DD
9F61AGG401				DD
9F61AGJ401				DD

Conversion Kit D to DD for use on Fuse Supports

Model No.	Figure (Fig.)	Used on live parts	Figure (Fig.)
9F61BNW402		9F61BNW751 (Indoor)	
		9F61AWW738 (Outdoor)	

Fuse Size EE (Ferrule Diameter Two 4" in Parallel)

Fuse Supports & Disconnect Switches	Spare Live Parts(*)	Figure (Fig.)	Spare Fuse Clips(**)	Fuse size
9F61AFB501	9F61BNW452		N/A	EE
9F61AFG501				EE
9F61AFJ501				EE

(*) Spare Live Parts: Order (1) Live Parts for each Fuse Support and Disconnecting Switch (includes live parts for both ends).
(**) Fuse Clips: Order (2) Fuse Clips for each Fuse Support and order (1) Fuse Clip for each Disconnecting Switch.