Protistor® size 000/00 aR

690VAC (IEC) / 700VAC (UL)

Square Body High-Speed Fuse-Links AC Protection

The 690/700V Protistor® fuse-links provide maximum flexibility in equipment design and ultimate protection for small power conversion equipment. The Protistor® have been engineered to provide state-of-the-art protection for semiconductors: diodes, thyristors, GTO's and IGBT devices. Fuses are assembled with pure silver, die-cut elements embedded in solidified sand, which helps control arcing characteristics for a lower I^2t and high interrupting rating level. All contact surfaces are silver plated and all hardware is non-magnetic.

Each fuse-link can be equipped with a low voltage trip-indicator which can operate a field mountable microswitch.



Features Benefits

- aR Class according to IEC 60269-4 and VDE 636-23
- Very low I^2t for improved semiconductor protection
- Ultra fast acting
- Superior cycling capability

Applications

- Protection of inverters, motor drives, UPS systems and similar 690V or less equipments.

Technical data overview

Size per Standard	000, 00
Speed/Characteristic	aR

Standards

IEC 60269-4 Compliance

UL/CSA Recognized Component

AC: UL Guide No. E76491

MERSEN reserves the right to change, update or correct, without notice, any information contained in this datasheet.

Product range

Size 000 DIN80, vertical body, without indicator

Catalog number	Reference number	Rated voltage AC (IEC)	Rated current I_n	Pre-arcing I^2t	Clearing I^2t at Rated Voltage	Rated breaking capacity AC	Power dissipation at I_n	Weight	Package
DN000UB69V80	K330036	690 V	80 A	390 A²s	2500 A²s	200 kA	21 W	110 g	6
DN000UB69V100	L330037	690 V	100 A	690 A²s	4200 A²s	200 kA	23 W	110 g	6
DN000UB69V125	M330038	690 V	125 A	1310 A²s	8900 A²s	200 kA	26 W	110 g	6
DN000UB69V160	N330039	690 V	160 A	2680 A²s	16000 A²s	200 kA	31 W	110 g	6
DN000UB69V200	P330040	690 V	200 A	5250 A²s	31500 A²s	200 kA	36 W	110 g	6
DN000UB69V250	Q330041	690 V	250 A	9860 A²s	52000 A²s	200 kA	45 W	110 g	6
DN000UB69V315	R330042	690 V	315 A	15420 A²s	82000 A²s	200 kA	58 W	110 g	6
DN000UB50V350	V330114	500 V	350 A	22400 A²s	110000 A²s	120 kA	58 W	110 g	6
DN000UB50V400	D330191	500 V	400 A	33180 A²s	160000 A²s	120 kA	66 W	110 g	6

Size 000 DIN80, vertical body, with indicator

Catalog number	Reference number	Rated voltage AC (IEC)	Rated current I_n	Pre-arcing I^2t	Clearing I^2t at Rated Voltage	Rated breaking capacity AC	Power dissipation at I_n	Weight	Package
DN000UB69V80V	W330023	690 V	80 A	390 A²s	2500 A²s	200 kA	21 W	110 g	6
DN000UB69V100V	X330024	690 V	100 A	690 A²s	4200 A²s	200 kA	23 W	110 g	6
DN000UB69V125V	Y330025	690 V	125 A	1310 A²s	8900 A²s	200 kA	26 W	110 g	6
DN000UB69V160V	Z330026	690 V	160 A	2680 A²s	16000 A²s	200 kA	31 W	110 g	6
DN000UB69V200V	A330027	690 V	200 A	5250 A²s	31500 A²s	200 kA	36 W	110 g	6
DN000UB69V250V	B330028	690 V	250 A	9860 A²s	52000 A²s	200 kA	45 W	110 g	6
DN000UB69V315V	C330029	690 V	315 A	15420 A²s	82000 A²s	200 kA	58 W	110 g	6
DN000UB50V350V	W330115	500 V	350 A	22400 A²s	110000 A²s	120 kA	58 W	110 g	6
DN000UB50V400V	E330192	500 V	400 A	33180 A²s	160000 A²s	120 kA	66 W	110 g	6

Size 000 DIN80, vertical body, for monitoring micro-contact

Catalog number	Reference number	Rated voltage AC (IEC)	Rated current I_n	Pre-arcing I^2t	Clearing I^2t at Rated Voltage	Rated breaking capacity AC	Power dissipation at I_n	Weight	Package
DN000UB69V80L	T330182	690 V	80 A	390 A²s	2500 A²s	200 kA	21 W	130 g	6
DN000UB69V100L	V330183	690 V	100 A	690 A²s	4200 A²s	200 kA	23 W	130 g	6
DN000UB69V125L	W330184	690 V	125 A	1310 A²s	8900 A²s	200 kA	26 W	130 g	6
DN000UB69V160L	X330185	690 V	160 A	2680 A²s	16000 A²s	200 kA	31 W	130 g	6
DN000UB69V200L	Y330186	690 V	200 A	5250 A²s	31500 A²s	200 kA	36 W	130 g	6
DN000UB69V250L	Z330187	690 V	250 A	9860 A²s	52000 A²s	200 kA	45 W	130 g	6
DN000UB69V315L	A330188	690 V	315 A	15420 A²s	82000 A²s	200 kA	58 W	130 g	6
DN000UB50V350L	B330189	500 V	350 A	22400 A²s	110000 A²s	120 kA	58 W	130 g	6
DN000UB69V400L	F330193	500 V	400 A	33180 A²s	160000 A²s	120 kA	66 W	130 g	6

MERSEN reserves the right to change, update or correct, without notice, any information contained in this datasheet.

Protistor® size 000/00 aR

690VAC (IEC) / 700VAC (UL)

Product range

Size 000 BS88, horizontal body, without indicator

Catalog number	Reference number	Rated voltage AC (IEC)	Rated current I_n	Pre-arcing I^2t	Clearing I^2t at Rated Voltage	Rated breaking capacity AC	Power dissipation at I_n	Weight	Package
BS000UB69V75	B330051	690 V	75 A	340 A²s	2250 A²s	200 kA	20.5 W	140 g	3
BS000UB69V80	C330052	690 V	80 A	390 A²s	2500 A²s	200 kA	21 W	140 g	3
BS000UB69V100	D330053	690 V	100 A	690 A²s	4200 A²s	200 kA	23 W	140 g	3
BS000UB69V110	E330100	690 V	110 A	950 A²s	6800 A²s	200 kA	24.5 W	140 g	3
BS000UB69V125	E330054	690 V	125 A	1310 A²s	8900 A²s	200 kA	26 W	140 g	3
BS000UB69V160	F330055	690 V	160 A	2680 A²s	16000 A²s	200 kA	31 W	140 g	3
BS000UB69V200	G330056	690 V	200 A	5250 A²s	31500 A²s	200 kA	36 W	140 g	3
BS000UB69V250	H330057	690 V	250 A	9860 A²s	52000 A²s	200 kA	45 W	140 g	3
BS000UB69V315	J330058	690 V	315 A	15420 A²s	82000 A²s	200 kA	58 W	140 g	3
BS000UB50V350	X330116	500 V	350 A	22400 A²s	110000 A²s	120 kA	58 W	140 g	3
BS000UB50V400	G330194	500 V	400 A	33180 A²s	160000 A²s	120 kA	66 W	140 g	3

Size 000 BS88, horizontal body, with indicator

Catalog number	Reference number	Rated voltage AC (IEC)	Rated current I_n	Pre-arcing I^2t	Clearing I^2t at Rated Voltage	Rated breaking capacity AC	Power dissipation at I_n	Weight	Package
BS000UB69V75P	H330126	690 V	75 A	340 A²s	2250 A²s	200 kA	20.5 W	155 g	3
BS000UB69V80P	J330127	690 V	80 A	390 A²s	2500 A²s	200 kA	21 W	155 g	3
BS000UB69V100P	K330128	690 V	100 A	690 A²s	4200 A²s	200 kA	23 W	155 g	3
BS000UB69V110P	L330129	690 V	110 A	950 A²s	6800 A²s	200 kA	24.5 W	155 g	3
BS000UB69V125P	M330130	690 V	125 A	1310 A²s	8900 A²s	200 kA	26 W	155 g	3
BS000UB69V160P	P330132	690 V	160 A	2680 A²s	16000 A²s	200 kA	31 W	155 g	3
BS000UB69V200P	Q330133	690 V	200 A	5250 A²s	31500 A²s	200 kA	36 W	155 g	3
BS000UB69V250P	R330134	690 V	250 A	9860 A²s	52000 A²s	200 kA	45 W	155 g	3
BS000UB50V315P	S330135	500 V	315 A	15420 A²s	82000 A²s	200 kA	58 W	155 g	3
BS000UB50V350P	T330136	500 V	350 A	22400 A²s	110000 A²s	120 kA	58 W	155 g	3
BS000UB50V400P	H330195	500 V	400 A	33180 A²s	160000 A²s	120 kA	66 W	155 g	3

Size 00 DIN80, vertical body, for monitoring micro-contact

Catalog number	Reference number	Rated voltage AC (IEC)	Rated current I_n	Pre-arcing I^2t	Clearing I^2t at Rated Voltage	Rated breaking capacity AC	Power dissipation at I_n	Weight	Package
DN00UB69V16L	V330275	690 V	16 A	7 A²s	52 A²s	200 kA	7 W	200 g	3
DN00UB69V20L	T330274	690 V	20 A	10 A²s	75 A²s	200 kA	9 W	200 g	3
DN00UB69V25L	M330268	690 V	25 A	15 A²s	120 A²s	200 kA	11 W	200 g	3
DN00UB69V32L	N330269	690 V	32 A	32 A²s	210 A²s	200 kA	15 W	200 g	3
DN00UB69V40L	P330270	690 V	40 A	61 A²s	400 A²s	200 kA	18 W	200 g	3
DN00UB69V50L	Q330271	690 V	50 A	102 A²s	700 A²s	200 kA	21 W	200 g	3
DN00UB69V63L	R330272	690 V	63 A	177 A²s	1200 A²s	200 kA	23 W	200 g	3
DN00UB69V80L	D330237	690 V	80 A	390 A²s	2200 A²s	200 kA	25 W	200 g	3
DN00UB69V100L	E330238	690 V	100 A	692 A²s	3900 A²s	200 kA	28 W	200 g	3
DN00UB69V125L	F330239	690 V	125 A	1170 A²s	6600 A²s	200 kA	33 W	200 g	3
DN00UB69V160L	G330240	690 V	160 A	2680 A²s	14000 A²s	200 kA	36 W	200 g	3
DN00UB69V200L	H330241	690 V	200 A	4690 A²s	24000 A²s	200 kA	42 W	200 g	3
DN00UB69V250L	J330242	690 V	250 A	8300 A²s	42500 A²s	200 kA	50 W	200 g	3
DN00UB69V315L	K330243	690 V	315 A	17520 A²s	81000 A²s	200 kA	58 W	200 g	3
DN00UB69V350L	L330244	690 V	350 A	25450 A²s	118000 A²s	200 kA	60 W	200 g	3
DN00UB69V400L	M330245	690 V	400 A	33180 A²s	150000 A²s	200 kA	70 W	200 g	3

MERSEN reserves the right to change, update or correct, without notice, any information contained in this datasheet.

Product range

Size 00 DIN110, vertical body, for monitoring micro-contact

Catalog number	Reference number	Rated voltage AC (IEC)	Rated current I_n	Pre-arcing I^2t	Clearing I^2t at Rated Voltage	Rated breaking capacity AC	Power dissipation at I_n	Weight	Package
DN00UB69V80D1L	A330257	690 V	80 A	390 A²s	2200 A²s	200 kA	25 W	240 g	3
DN00UB69V100D1L	B330258	690 V	100 A	692 A²s	3900 A²s	200 kA	28 W	240 g	3
DN00UB69V125D1L	C330259	690 V	125 A	1170 A²s	6600 A²s	200 kA	33 W	240 g	3
DN00UB69V160D1L	D330260	690 V	160 A	2680 A²s	14000 A²s	200 kA	36 W	240 g	3
DN00UB69V200D1L	E330261	690 V	200 A	4690 A²s	24000 A²s	200 kA	42 W	240 g	3
DN00UB69V250D1L	F330262	690 V	250 A	8300 A²s	42500 A²s	200 kA	50 W	240 g	3
DN00UB69V315D1L	G330263	690 V	315 A	17520 A²s	81000 A²s	200 kA	58 W	240 g	3
DN00UB69V350D1L	H330264	690 V	350 A	25450 A²s	118000 A²s	200 kA	60 W	240 g	3
DN00UB69V400D1L	J330265	690 V	400 A	33180 A²s	150000 A²s	200 kA	70 W	240 g	3

MERSEN reserves the right to change, update or correct, without notice, any information contained in this datasheet.

Time current characteristic curves

Size 000

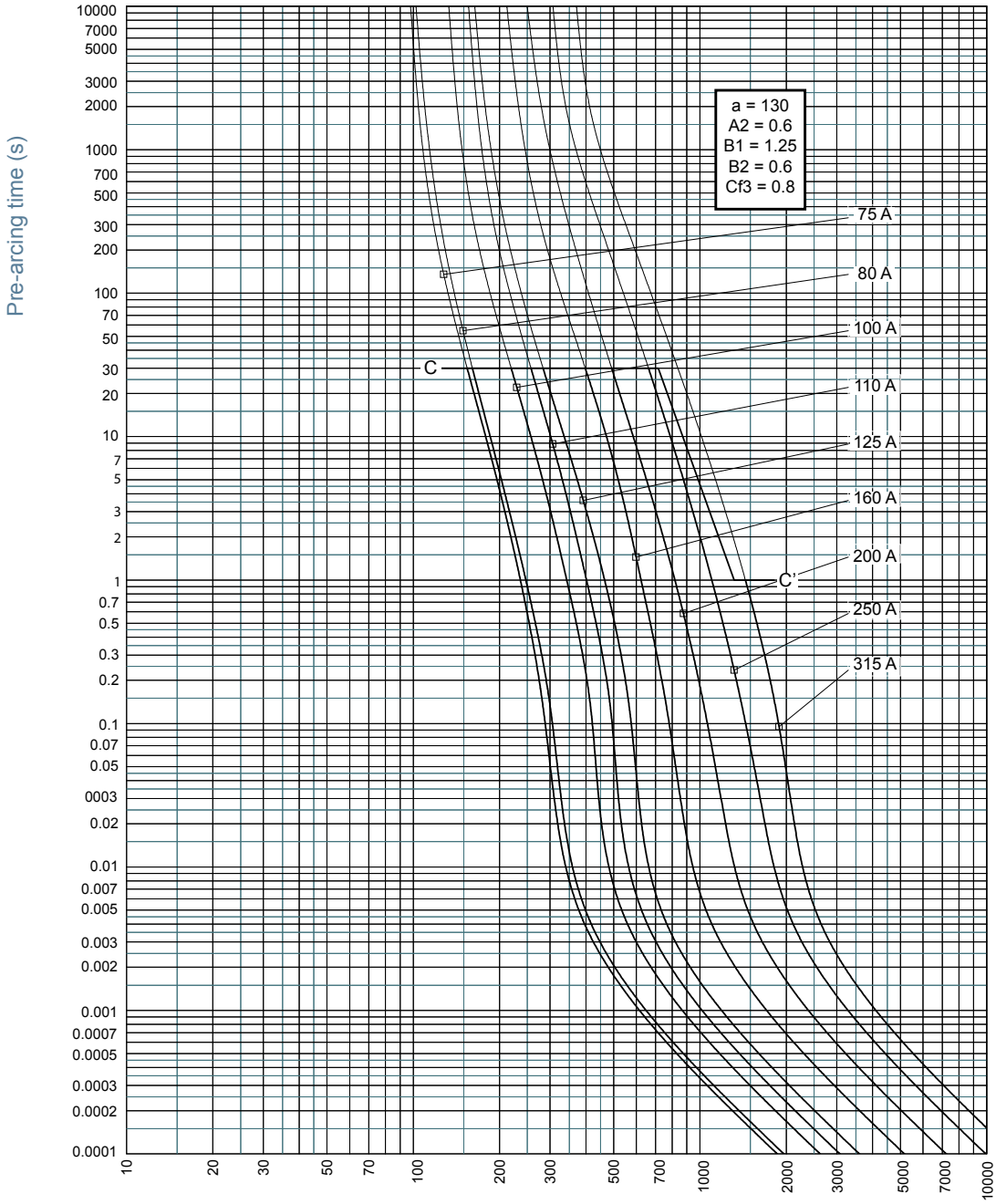

MERSEN reserves the right to change, update or correct, without notice, any information contained in this datasheet.

Time current characteristic curves

Size 00

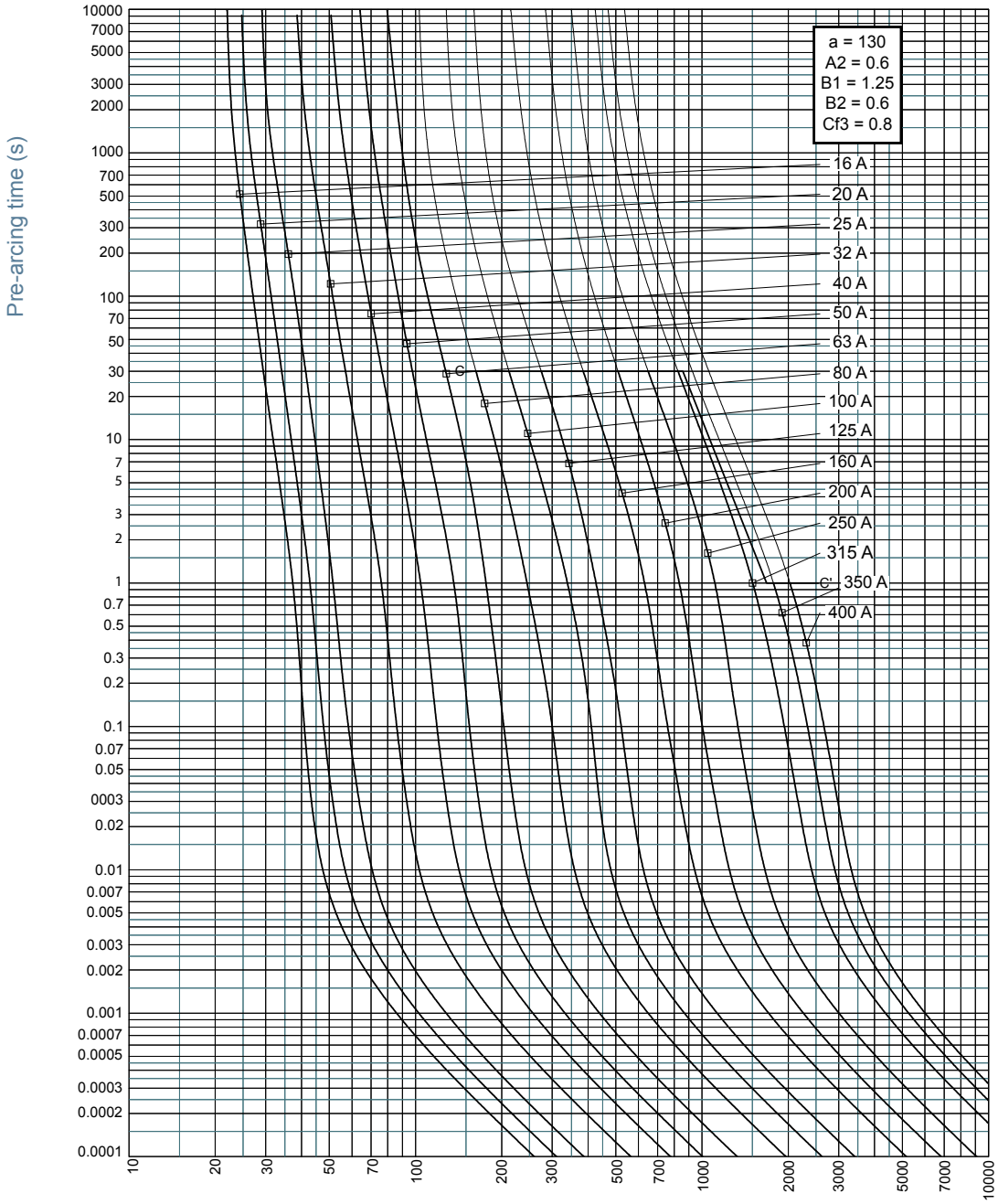

MERSEN reserves the right to change, update or correct, without notice, any information contained in this datasheet.

Current limiting diagram

Size 000

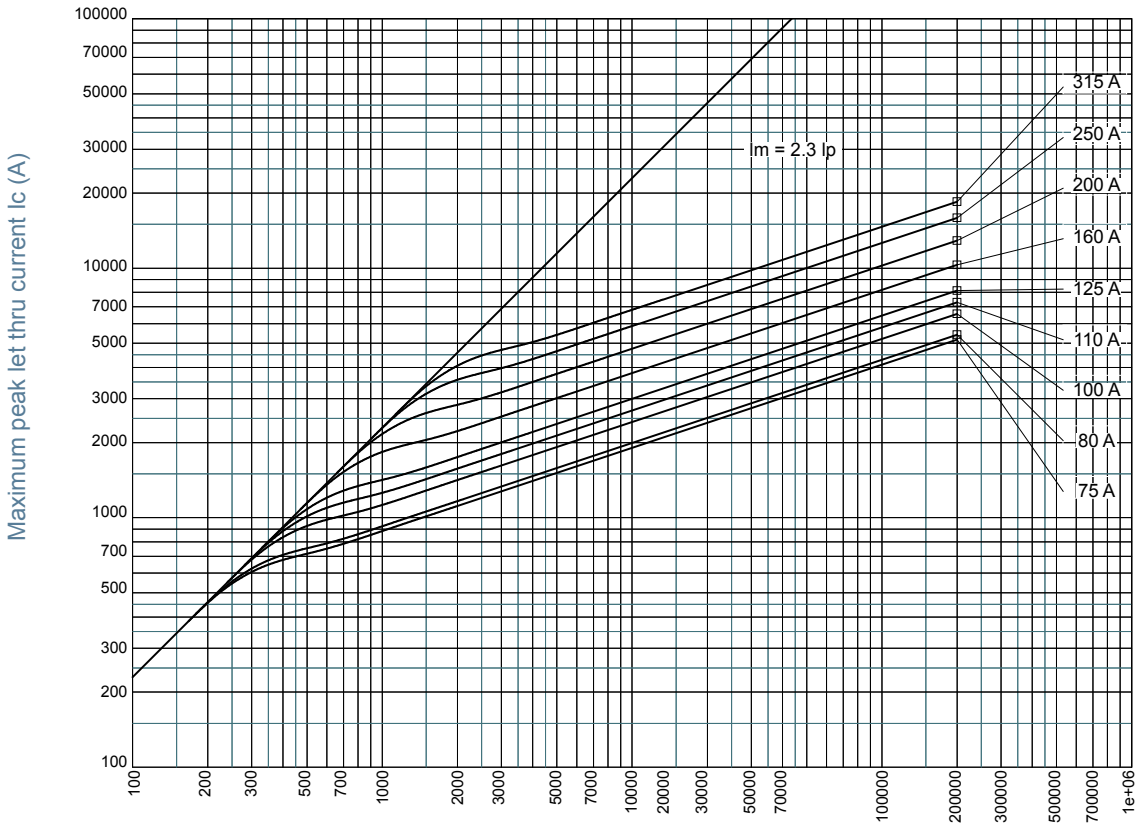

MERSEN reserves the right to change, update or correct, without notice, any information contained in this datasheet.

Current limiting diagram

Size 00

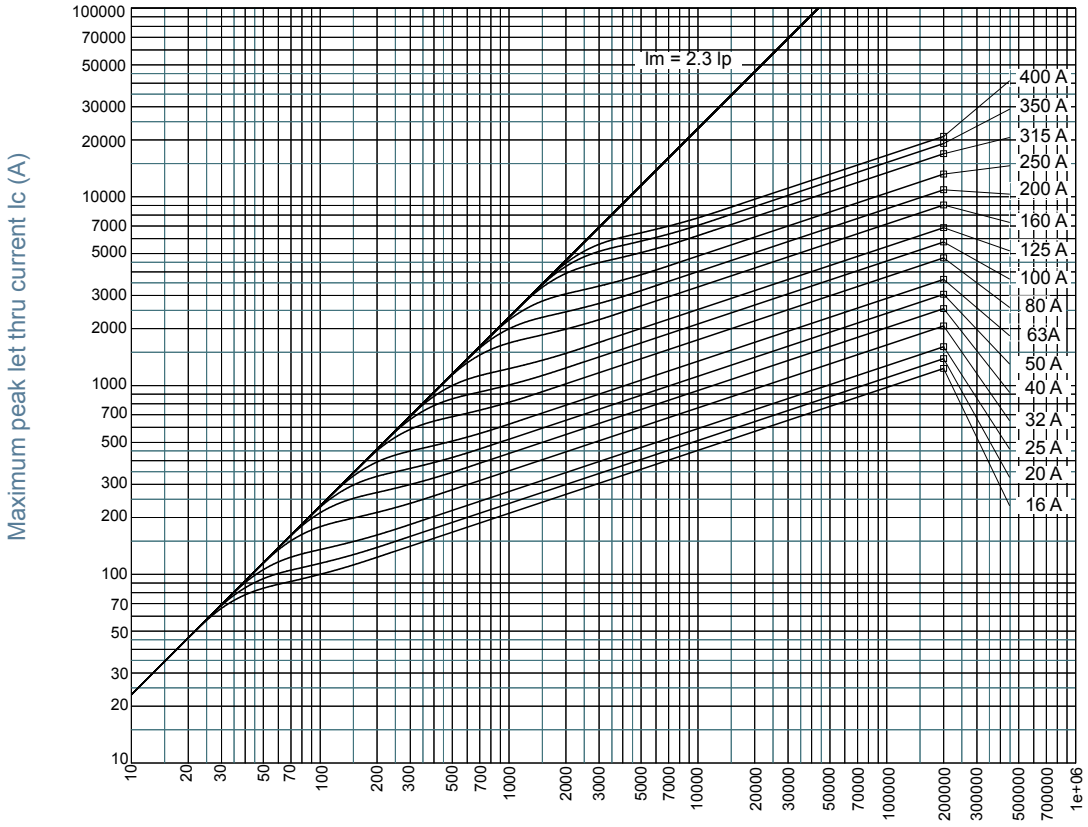

MERSEN reserves the right to change, update or correct, without notice, any information contained in this datasheet.

I²t Multiplier coefficient

Size 000

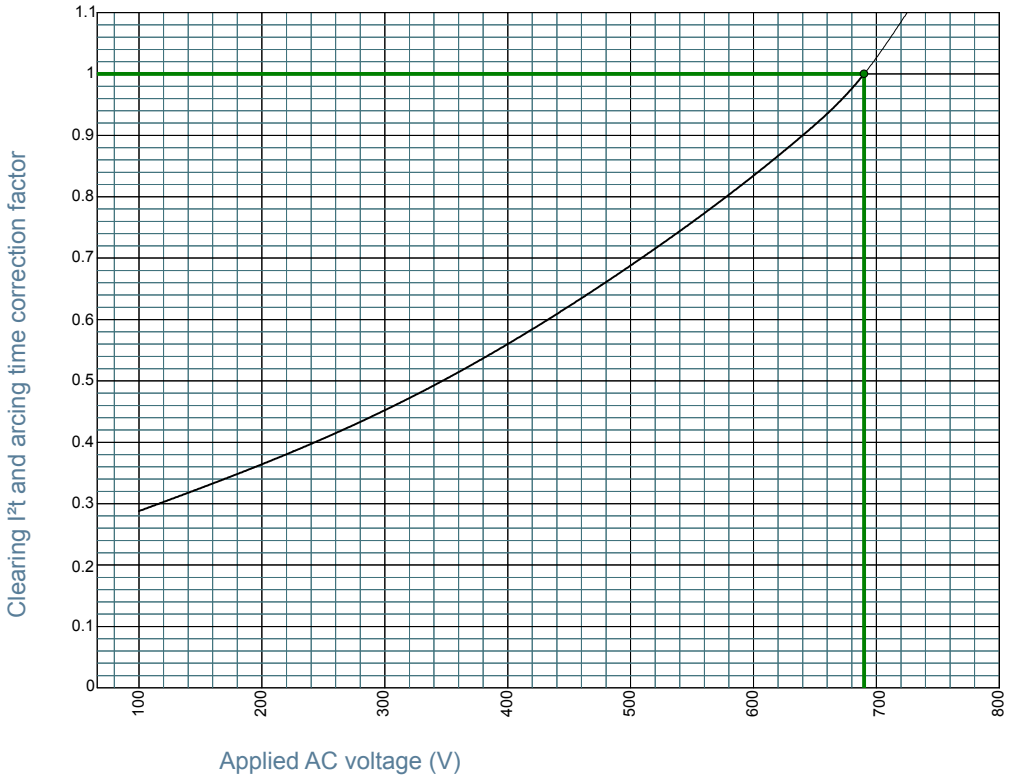

MERSEN reserves the right to change, update or correct, without notice, any information contained in this datasheet.

I²t Multiplier coefficient

Size 00

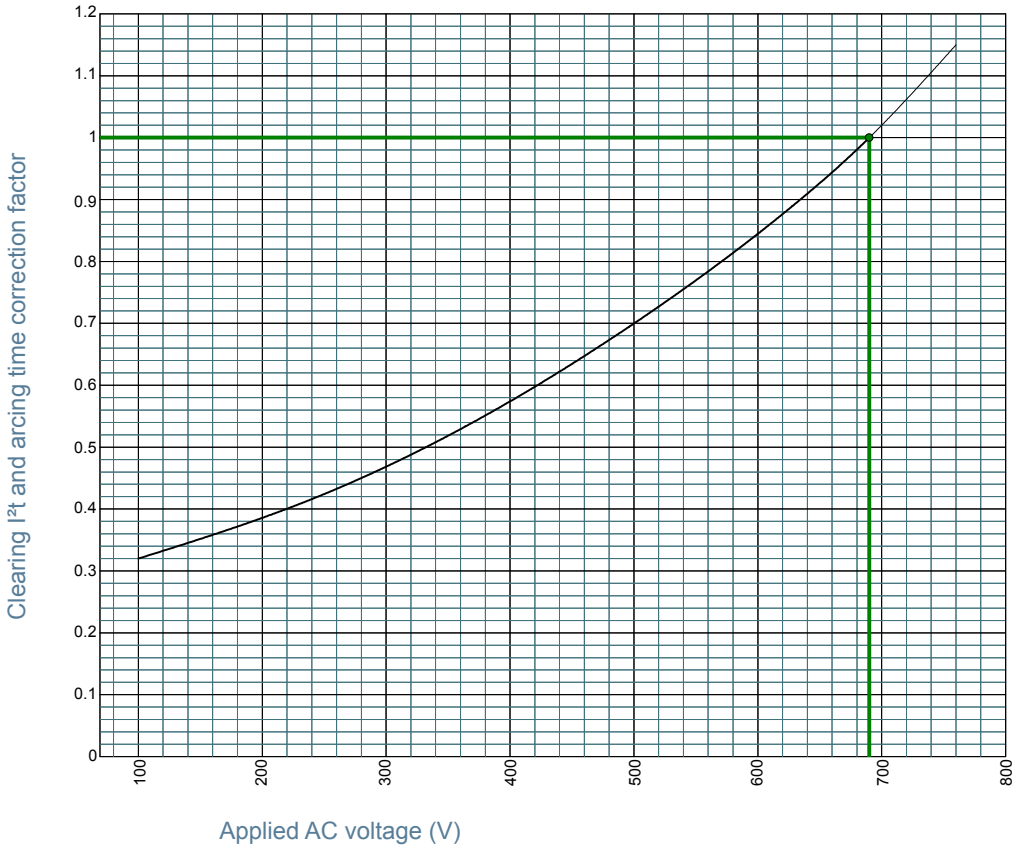

MERSEN reserves the right to change, update or correct, without notice, any information contained in this datasheet.

Characteristics total I²t curve

Size 000

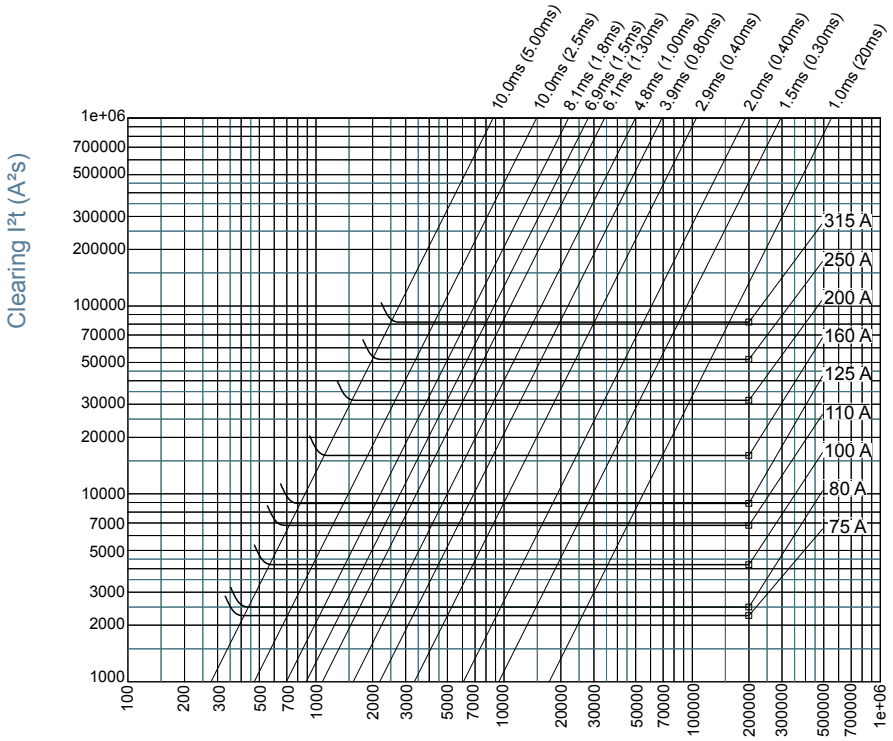

MERSEN reserves the right to change, update or correct, without notice, any information contained in this datasheet.

Characteristics total I²t curve

Size 00

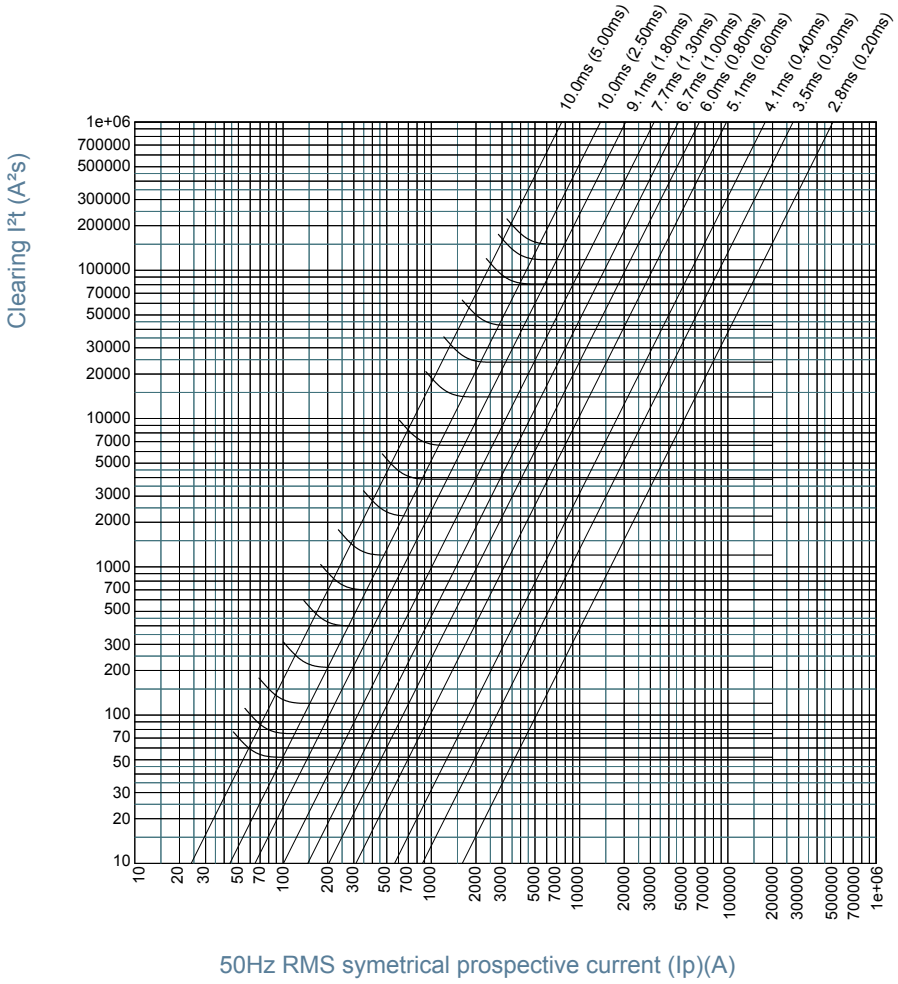

MERSEN reserves the right to change, update or correct, without notice, any information contained in this datasheet.

Peak arc voltage

Size 000

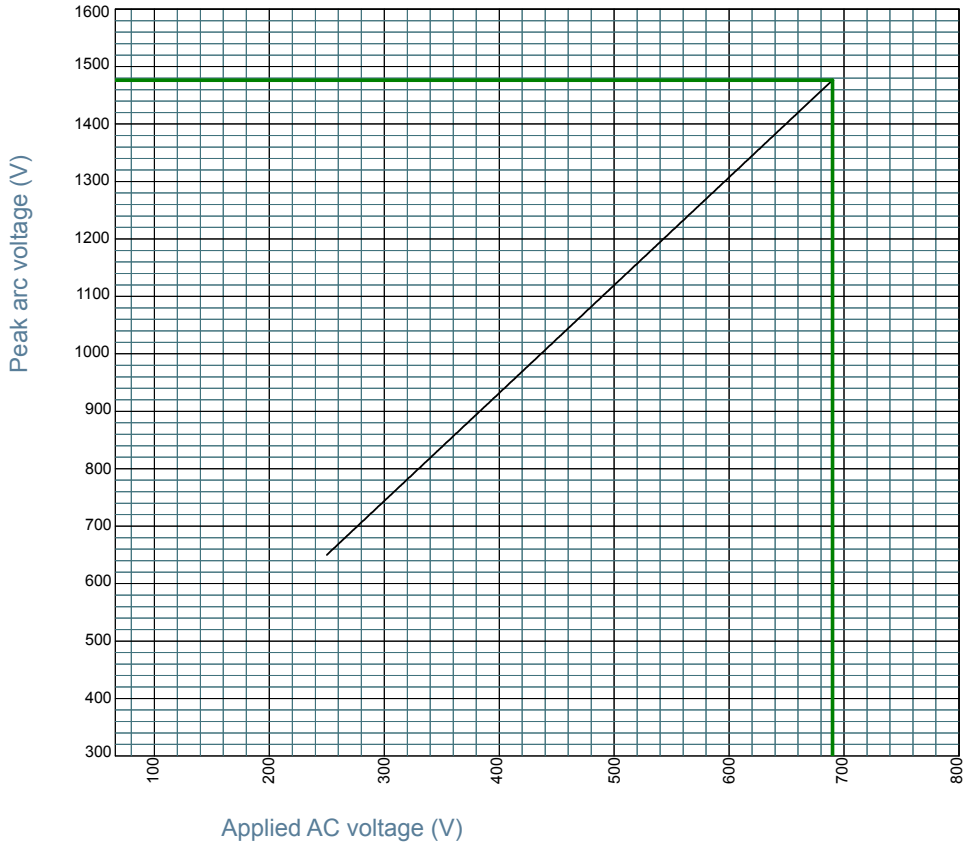

MERSEN reserves the right to change, update or correct, without notice, any information contained in this datasheet.

Peak arc voltage

Size 00

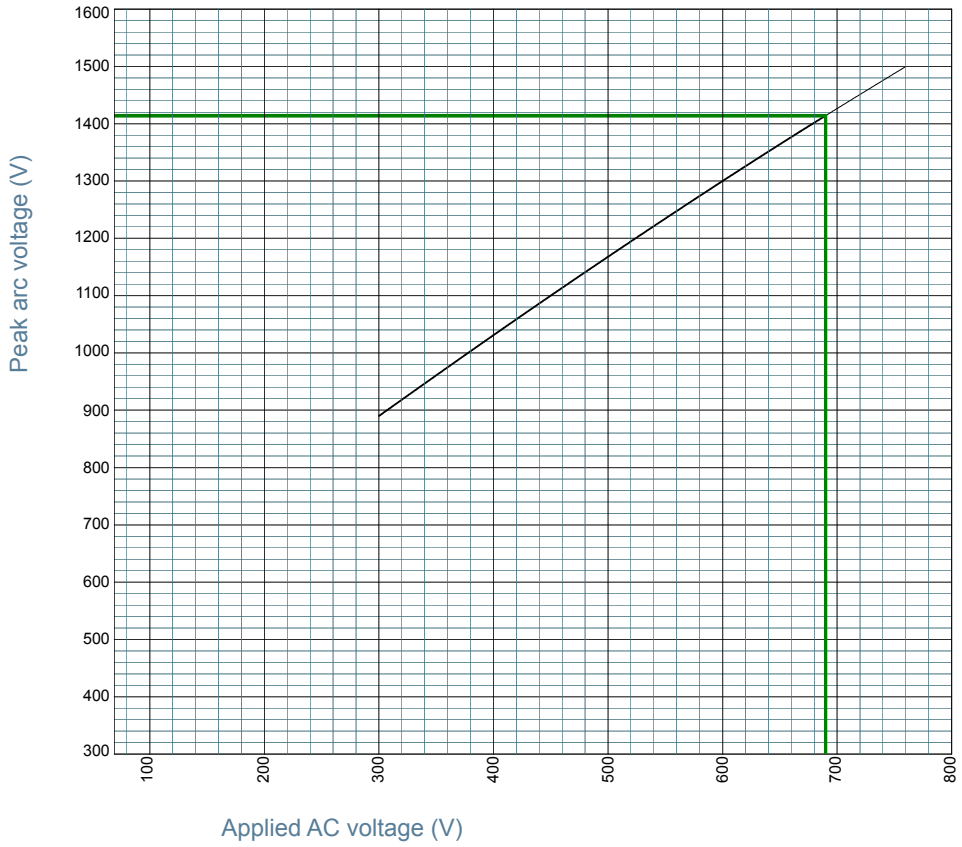

MERSEN reserves the right to change, update or correct, without notice, any information contained in this datasheet.

Dimensions

Size 000 without indicator

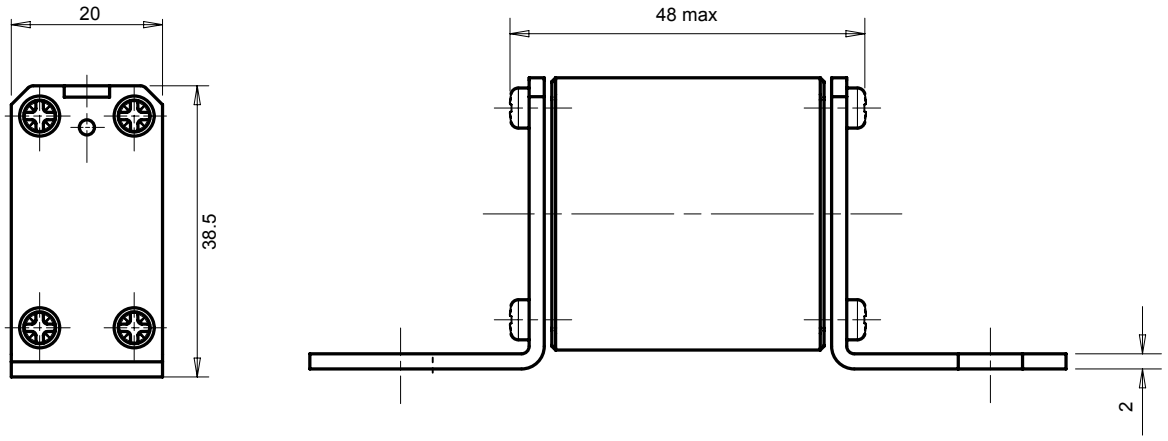

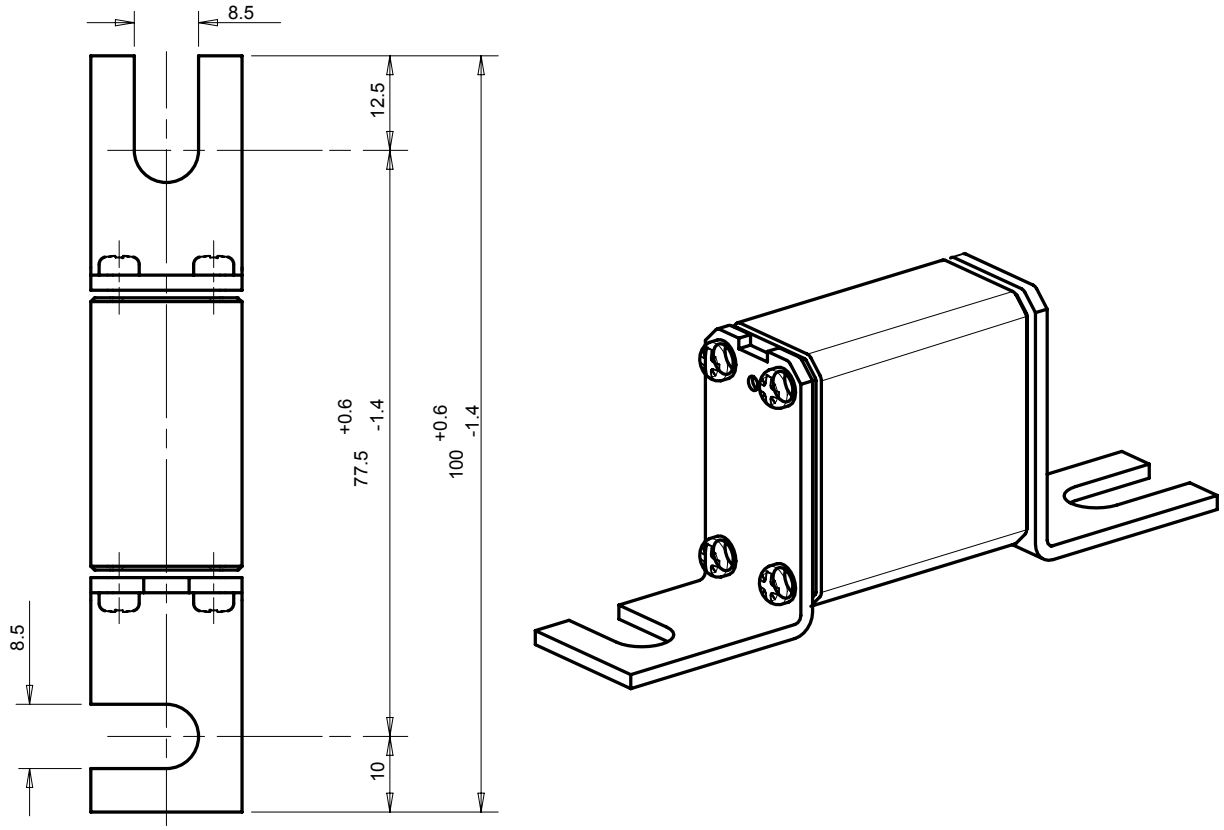

Dimensions in mm

MERSEN reserves the right to change, update or correct, without notice, any information contained in this datasheet.

Dimensions

Size 000 with indicator

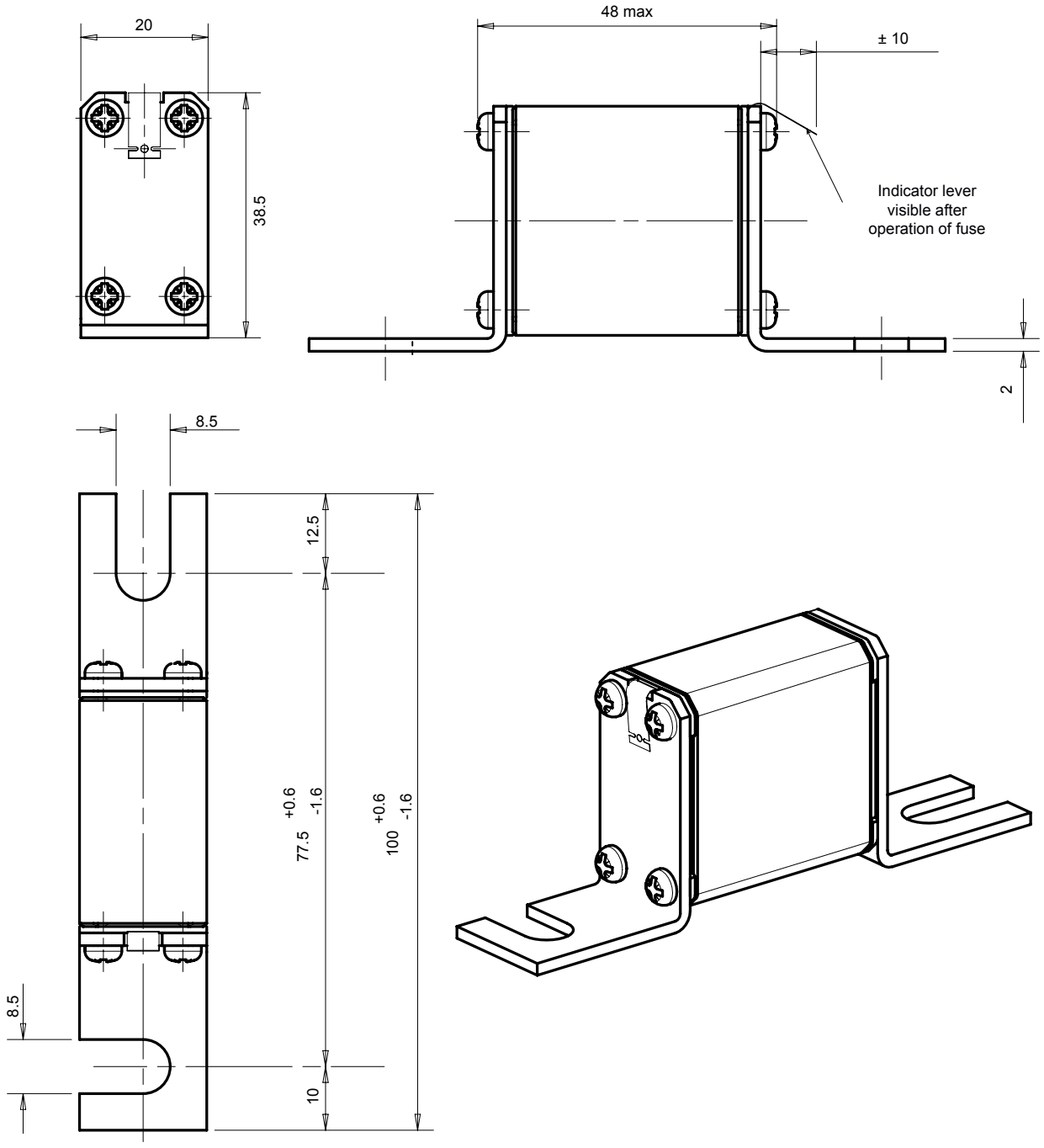

Dimensions in mm

MERSEN reserves the right to change, update or correct, without notice, any information contained in this datasheet.

Dimensions

Size 000 for monitoring micro-contact

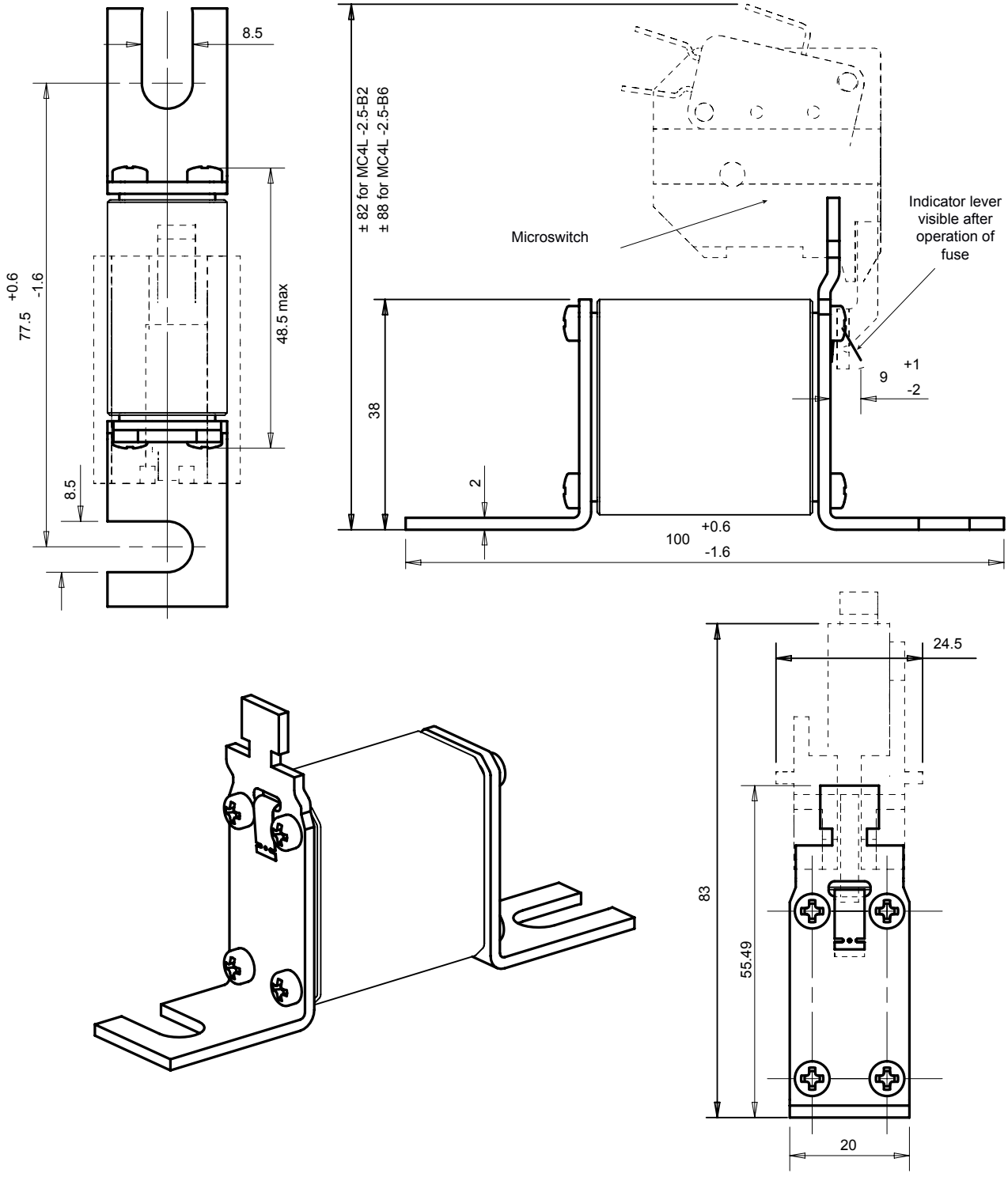

Dimensions in mm

MERSEN reserves the right to change, update or correct, without notice, any information contained in this datasheet.

Dimensions

Size 000 BS88 without indicator

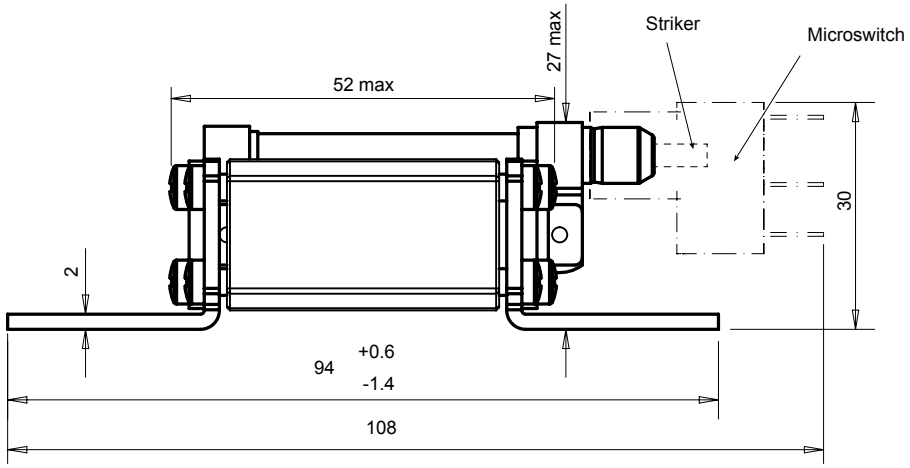

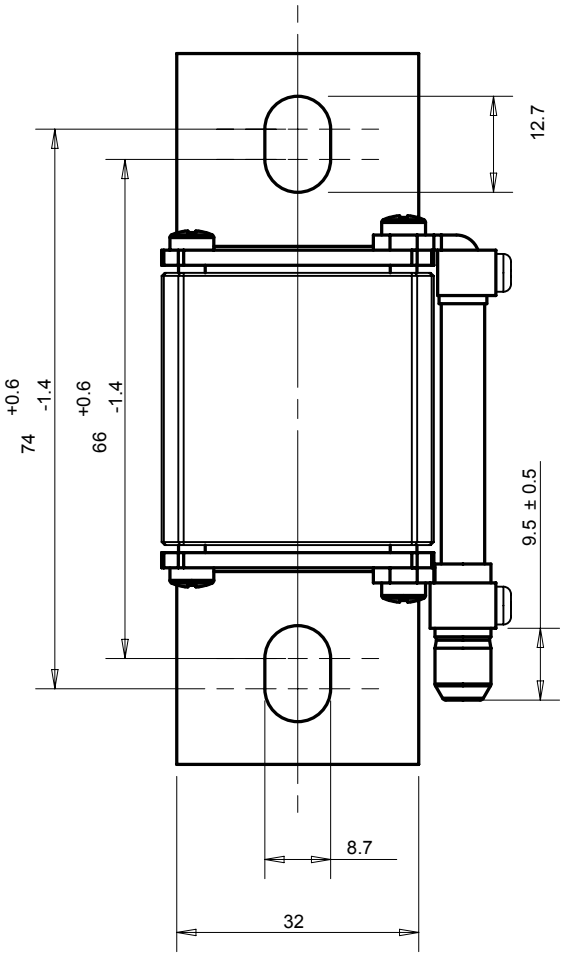

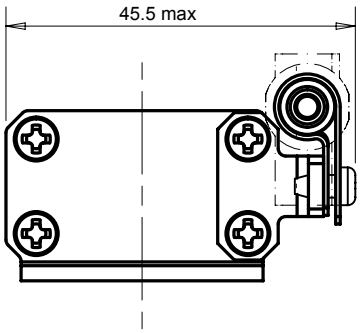

Dimensions in mm

MERSEN reserves the right to change, update or correct, without notice, any information contained in this datasheet.

Dimensions

Size 000 BS88 with indicator

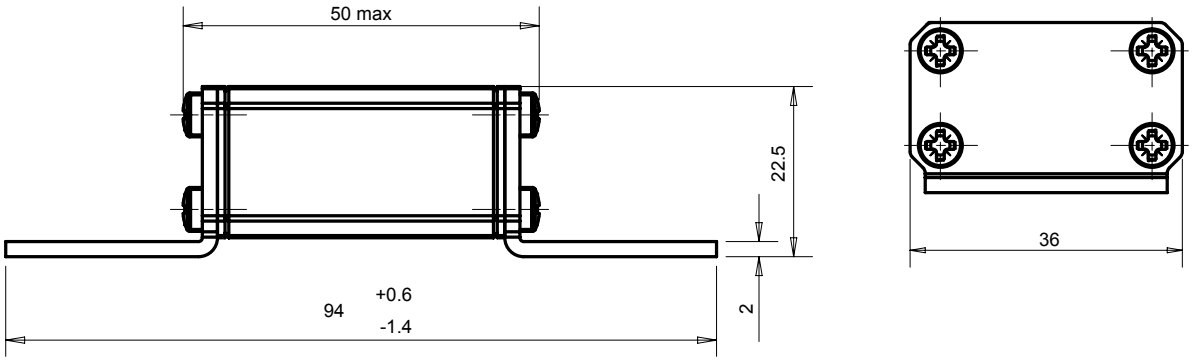

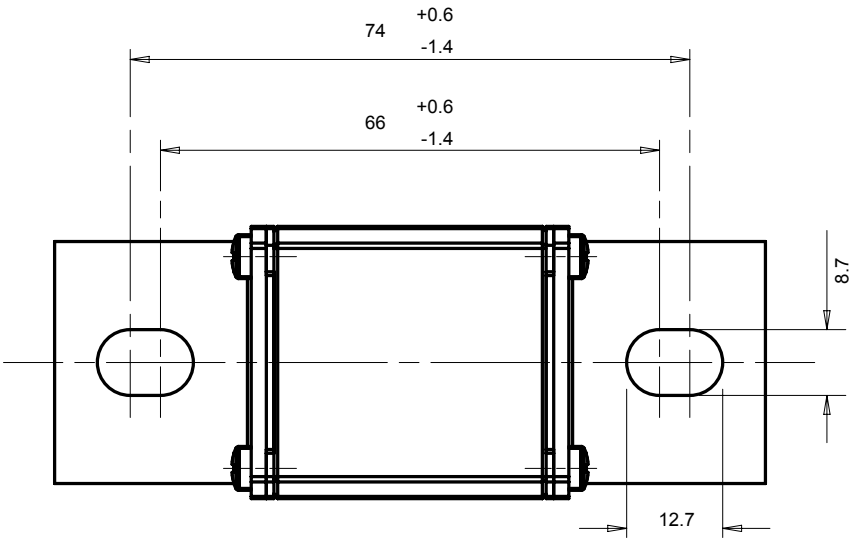

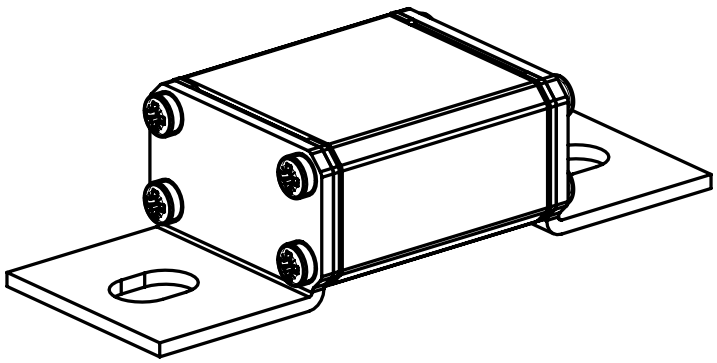

Dimensions in mm

MERSEN reserves the right to change, update or correct, without notice, any information contained in this datasheet.

Dimensions

Size 00 DIN80 for monitoring micro-contact

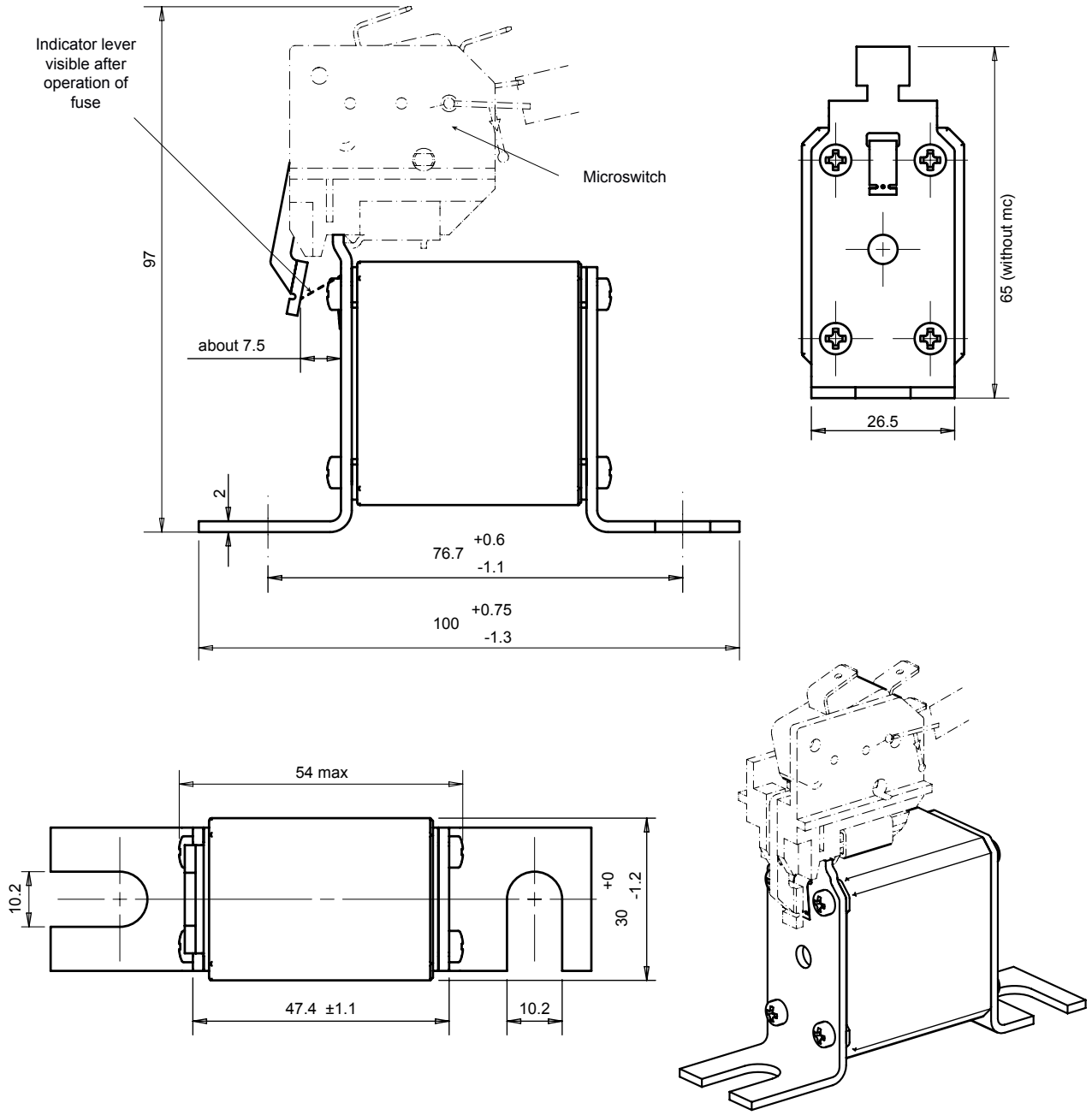

Dimensions in mm

MERSEN reserves the right to change, update or correct, without notice, any information contained in this datasheet.

Dimensions

Size 00 DIN110 for monitoring micro-contact

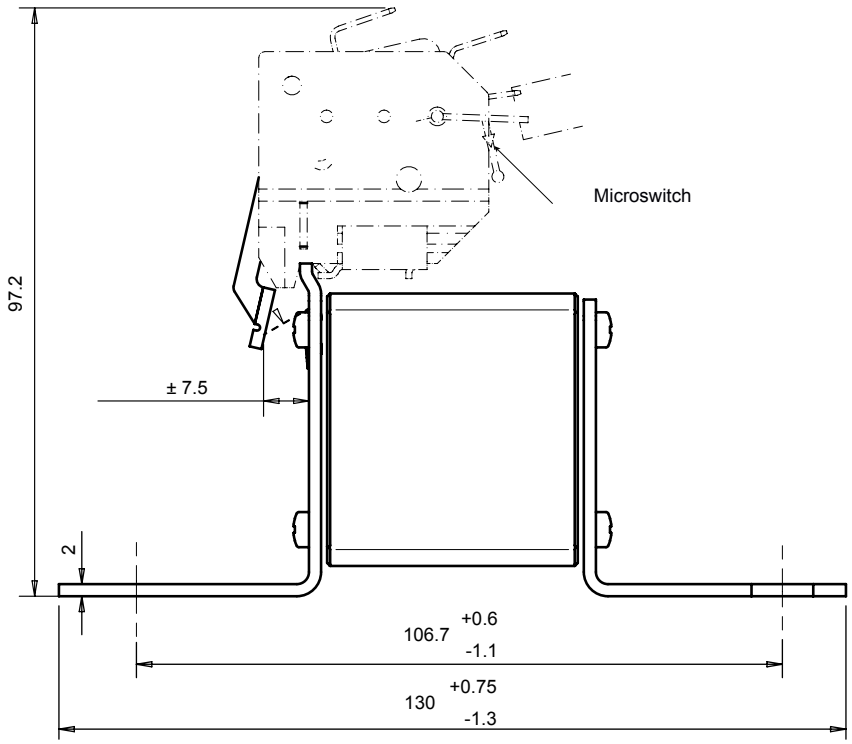

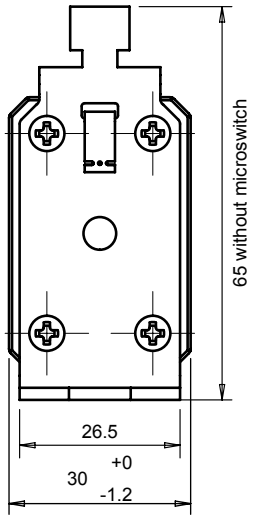

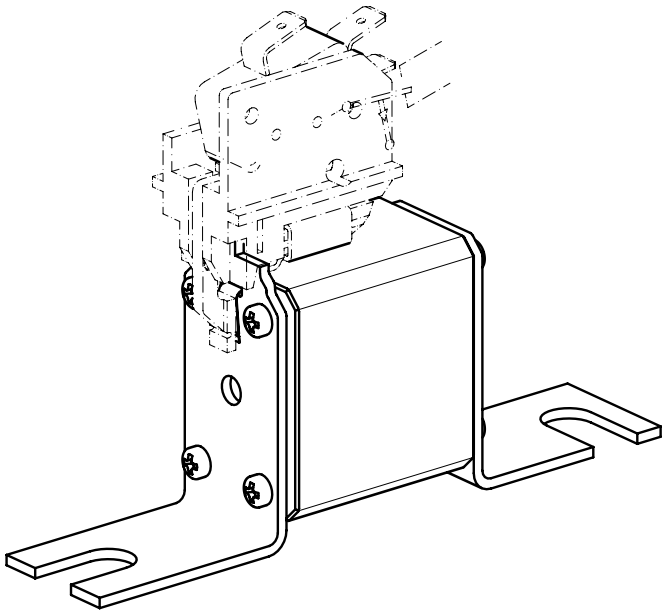

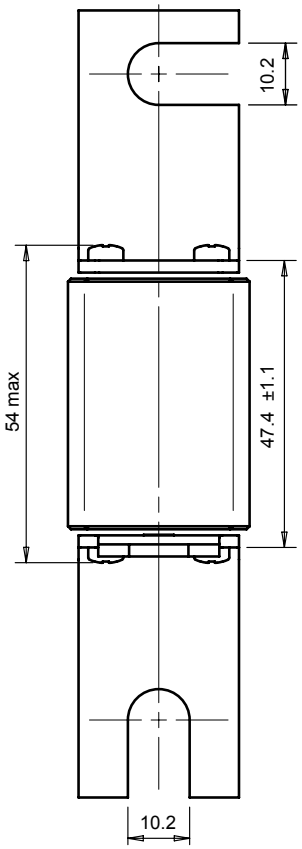

Dimensions in mm

Appendix

MERSEN reserves the right to change, update or correct, without notice, any information contained in this datasheet.

Index

Catalog number	Reference number	Alternate Numbers	Description	Page
DN000UB69V80	K330036	-	6,9URB000D08/080	2
DN000UB69V100	L330037	-	6,9URB000D08/100	2
DN000UB69V125	M330038	-	6,9URB000D08/125	2
DN000UB69V160	N330039	-	6,9URB000D08/160	2
DN000UB69V200	P330040	-	6,9URB000D08/200	2
DN000UB69V250	Q330041	-	6,9URB000D08/250	2
DN000UB69V315	R330042	-	6,9URB000D08/315	2
DN000UB50V350	V330114	-	5URB000D08/350	2
DN000UB50V400	D330191	-	5URB000D08/400	2
DN000UB69V80V	W330023	-	6,9URB000D08V080	2
DN000UB69V100V	X330024	-	6,9URB000D08V100	2
DN000UB69V125V	Y330025	-	6,9URB000D08V125	2
DN000UB69V160V	Z330026	-	6,9URB000D08V160	2
DN000UB69V200V	A330027	-	6,9URB000D08V200	2
DN000UB69V250V	B330028	-	6,9URB000D08V250	2
DN000UB69V315V	C330029	-	6,9URB000D08V315	2
DN000UB50V350V	W330115	-	5URB000D08V350	2
DN000UB50V400V	E330192	-	5URB000D08V400	2
DN000UB69V80L	T330182	-	6,9URB000D08L080	2
DN000UB69V100L	V330183	-	6,9URB000D08L100	2
DN000UB69V125L	W330184	-	6,9URB000D08L125	2
DN000UB69V160L	X330185	-	6,9URB000D08L160	2
DN000UB69V200L	Y330186	-	6,9URB000D08L200	2
DN000UB69V250L	Z330187	-	6,9URB000D08L250	2
DN000UB69V315L	A330188	-	6,9URB000D08L315	2
DN000UB50V350L	B330189	-	5URB000D08L350	2
DN000UB69V400L	F330193	-	5URB000D08L400	2
BS000UB69V75	B330051	6,9URB000BS88/075	6,9URB000BS88/075	3
BS000UB69V80	C330052	-	-	3
BS000UB69V100	D330053	-	6,9URB000BS88/100	3
BS000UB69V110	E330100	-	6,9URB000BS88/110	3
BS000UB69V125	E330054	-	6,9URB000BS88/125	3
BS000UB69V160	F330055	-	6,9URB000BS88/160	3
BS000UB69V200	G330056	-	6,9URB000BS88/200	3
BS000UB69V250	H330057	-	6,9URB000BS88/250	3
BS000UB69V315	J330058	-	6,9URB000BS88/0315	3
BS000UB50V350	X330116	-	5URB000BS88/350	3
BS000UB50V400	G330194	-	5URB000BS88 400	3
BS000UB69V75P	H330126	-	-	3
BS000UB69V80P	J330127	-	-	3
BS000UB69V100P	K330128	-	-	3
BS000UB69V110P	L330129	-	-	3
BS000UB69V125P	M330130	-	-	3
BS000UB69V160P	P330132	-	-	3
BS000UB69V200P	Q330133	-	6,9URB000BS88P200	3
BS000UB69V250P	R330134	-	-	3
BS000UB50V315P	S330135	-	-	3
BS000UB50V350P	T330136	-	-	3

MERSEN reserves the right to change, update or correct, without notice, any information contained in this datasheet.

Index

Catalog number	Reference number	Alternate Numbers	Description	Page
BS000UB50V400P	H330195	-	-	3
DN00UB69V16L	V330275	-	6,9URB00D08L016	3
DN00UB69V20L	T330274	-	-	3
DN00UB69V25L	M330268	-	6,9URB00D08L025	3
DN00UB69V32L	N330269	-	6,9URB00D08L032	3
DN00UB69V40L	P330270	-	6,9URB00D08L040	3
DN00UB69V50L	Q330271	-	6,9URB00D08L050	3
DN00UB69V63L	R330272	-	6,9URB00D08L063	3
DN00UB69V80L	D330237	-	6,9URB00D08L080	3
DN00UB69V100L	E330238	-	6,9URB00D08L100	3
DN00UB69V125L	F330239	-	6,9URB00D08L125	3
DN00UB69V160L	G330240	-	6,9URB00D08L160	3
DN00UB69V200L	H330241	-	6,9URB00D08L200	3
DN00UB69V250L	J330242	-	6,9URB00D08L250	3
DN00UB69V315L	K330243	-	6,9URB00D08L315	3
DN00UB69V350L	L330244	-	6,9URB00D08L350	3
DN00UB69V400L	M330245	-	6,9URB00D08L400	3
DN00UB69V80D1L	A330257	-	-	4
DN00UB69V100D1L	B330258	-	6,9URB00D11L100	4
DN00UB69V125D1L	C330259	-	-	4
DN00UB69V160D1L	D330260	-	6,9URB00D11L160	4
DN00UB69V200D1L	E330261	-	6,9URB00D11L200	4
DN00UB69V250D1L	F330262	-	6,9URB00D11L250	4
DN00UB69V315D1L	G330263	-	-	4
DN00UB69V350D1L	H330264	-	6,9URB00D11L350	4
DN00UB69V400D1L	J330265	-	6,9URB00D11L400	4

MERSEN reserves the right to change, update or correct, without notice, any information contained in this datasheet.