RSP Supply Inc. | https://www.rspsupply.com

Protistor® size 14x51 gLB 440VDC

SEMICONDUCTOR PROTECTION FUSES

IEC HIGH-SPEED CYLINDRICAL FUSE-LINKS DC PROTECTION



FEATURES & BENEFITS

- Clearing all overloads
- Improved safety and protection
- Enabling selective coordination among all
- Distribution circuit fuses
- With trip-indicator

STANDARDS

- RoHS compliant

These Protistor® size 14x51 have been designed to protect power semiconductors.

They are extremely high interrupting rating fuses: 440VDC, with large band of ratings (current rating 2 to 50A).

TECHNICAL DATA OVERVIEW

Voltage DC	440 VDC
Ampere Range (A)	2 ... 50 A
Speed/Characteristic	gLB
Product Size	14x51

RoHS

MERSEN reserves the right to change, update or correct, without notice, any information contained in this datasheet.

RSP Supply Inc. | https://www.rspsupply.com

Protistor® size 14x51 gLB 440VDC

PRODUCT RANGE

Size 14x51 gLB 440VDC with striker

Catalog number	Item number	Rated voltage DC (IEC)	Rated current I_n	Rated breaking capacity DC @10ms	Rated breaking capacity DC @30ms	Power dissipation at 0.8 I_n	Power dissipation at I_n	Package	Weight
FD14GB44V2T	E075720	440 V	2 A	100 kA	40 kA	0.6 W	1 W	10	19 g
FD14GB44V6T	Q094084	440 V	6 A	100 kA	40 kA	1 W	1.7 W	10	19 g
FD14GB44V8T	F075721	440 V	8 A	100 kA	40 kA	1.1 W	1.8 W	10	19 g
FD14GB44V10T	G075722	440 V	10 A	100 kA	40 kA	1.2 W	1.9 W	10	19 g
FD14GB44V12T	R094085	440 V	12 A	100 kA	40 kA	1.3 W	2.1 W	10	19 g
FD14GB44V16T	H075723	440 V	16 A	100 kA	40 kA	1.5 W	2.5 W	10	19 g
FD14GB44V20T	L221132	440 V	20 A	100 kA	40 kA	1.7 W	3 W	10	19 g
FD14GB44V25T	J075724	440 V	25 A	100 kA	40 kA	2 W	3.5 W	10	19 g
FD14GB44V32T	S098410	440 V	32 A	100 kA	40 kA	2.5 W	4.3 W	10	19 g
FD14GB44V40T	T098687	440 V	40 A	100 kA	40 kA	3 W	5.1 W	10	19 g
FD14GB44V50T	H076620	440 V	50 A	100 kA	40 kA	3.5 W	6 W	10	19 g

MERSEN reserves the right to change, update or correct, without notice, any information contained in this datasheet.

RSP Supply Inc. | https://www.rspsupply.com

Protistor® size 14x51 gLB 440VDC

TIME CURRENT CHARACTERISTIC CURVES

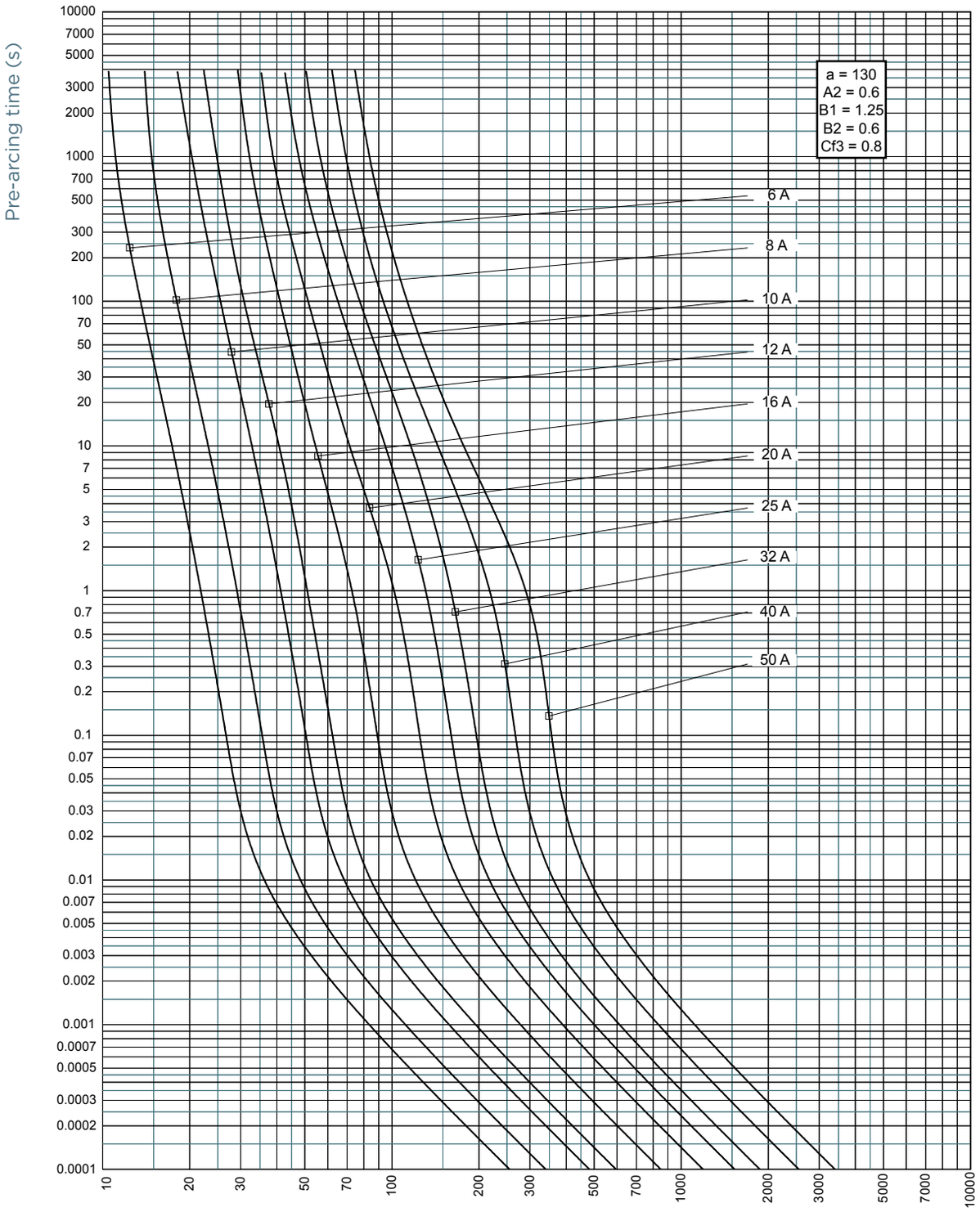

MERSEN reserves the right to change, update or correct, without notice, any information contained in this datasheet.

RSP Supply Inc. | https://www.rspsupply.com

Protistor® size 14x51 gLB 440VDC

L/R TIME CONSTANT VS DC VOLTAGE CAPABILITY

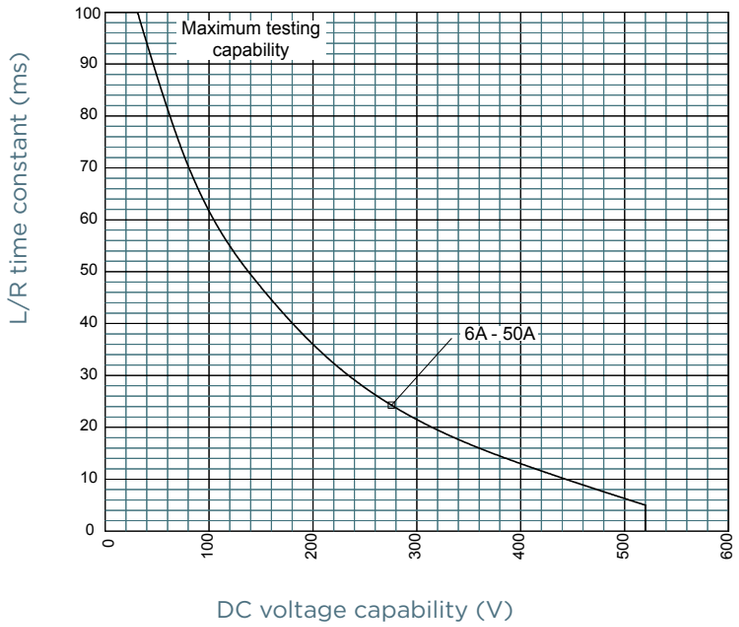

POWER DISSIPATION

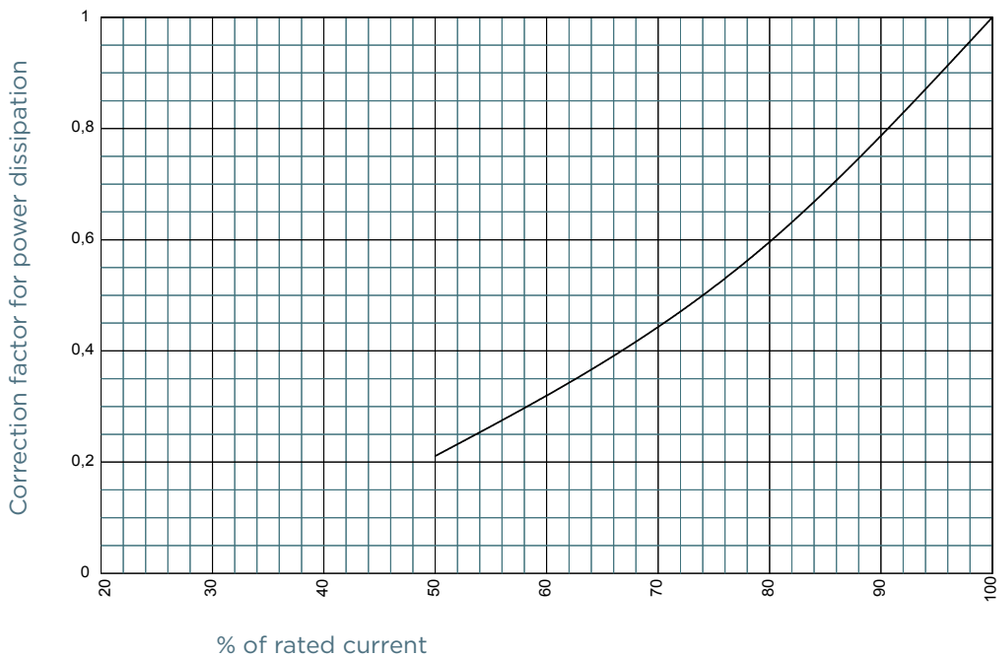

MERSEN reserves the right to change, update or correct, without notice, any information contained in this datasheet.

RSP Supply Inc. | https://www.rspsupply.com

Protistor® size 14x51 gLB 440VDC

DIMENSIONS

CP14x51 gLB 440V

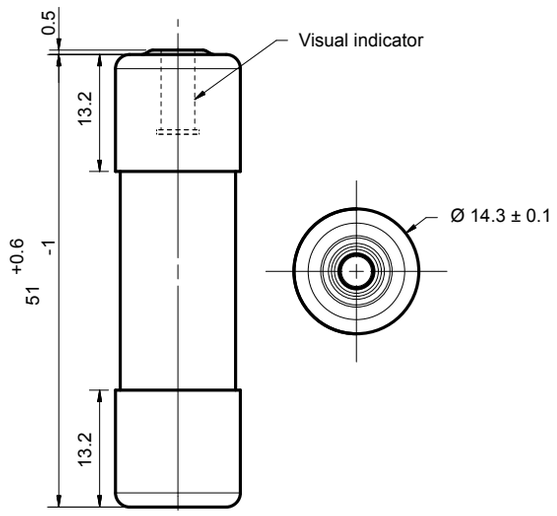

MERSEN reserves the right to change, update or correct, without notice, any information contained in this datasheet.