ALUMINUM ELECTROLYTIC CAPACITORS

nichicon

NX Screw Terminal Type, 85°C
High ripple longer life.
series

HR High Ripple Current
L Long Life

- Suited for use in industrial power supplies for inverter circuitry, etc.
- High ripple current, extra-high voltage application.
- High reliability, long life for 20,000 hours application of rated ripple current at +85°C.
- Extended range up to φ100 × 250L size.
- Flame retardant electroly to type available.
- Compliant to the RoHS directive (2011/65/EU).

QR
High Speed charge-discharge
NX
Long life NY



■Specifications

Item	Performance Characteristics
Category Temperature Range	– 25 to +85°C
Rated Voltage Range	350 to 630V
Rated Capacitance Range	1000 to 27000μF
Capacitance Tolerance	±20% at 120Hz, 20°C
Leakage Current	After 5 minutes' application of rated voltage, leakage current is not more than $3\sqrt{CV}$ (μA) or 5 mA, whichever is smaller (at 20°C). [C : Rated Capacitance(μF), V : Voltage (V)]
Tangent of loss angle (tan δ)	See refer to next page (Measurement frequency : 120Hz at 20°C)
Stability at Low Temperature	Rated voltage (V): 350 to 630; Impedance ratio ZT/Z20(MAX.): Z – 25°C / Z+20°C: 8. Measurement frequency : 120Hz
Endurance	The specifications listed at right shall be met when the capacitors are restored to 20°C after the standard ripple current is applied for 20000 hours at 85°C, the peak voltage shall not exceed the rated voltage.(2000 hours at 85°C for the parts rated at 630V, 5000 hours at 85°C for the parts rated at 500V and 550V) The specifications listed at right shall be met when the capacitors are restored to 20°C after D.C. bias plus rated ripple current is applied for 5000 hours at 85°C, the peak voltage shall not exceed the rated voltage. Capacitance change: Within ±20% of the initial capacitance value; tan δ: 300% or less than the initial specified value; Leakage current: Less than or equal to the initial specified value
Shelf Life	After storing the capacitors under no load at 85°C for 1000 hours and then performing voltage treatment based on JIS C 5101-4 clause 4.1 at 20°C, they shall meet the specified values for the endurance characteristics listed above.
Marking	Printed with white color letter on black sleeve.

■Drawing

Method mount metal bracket

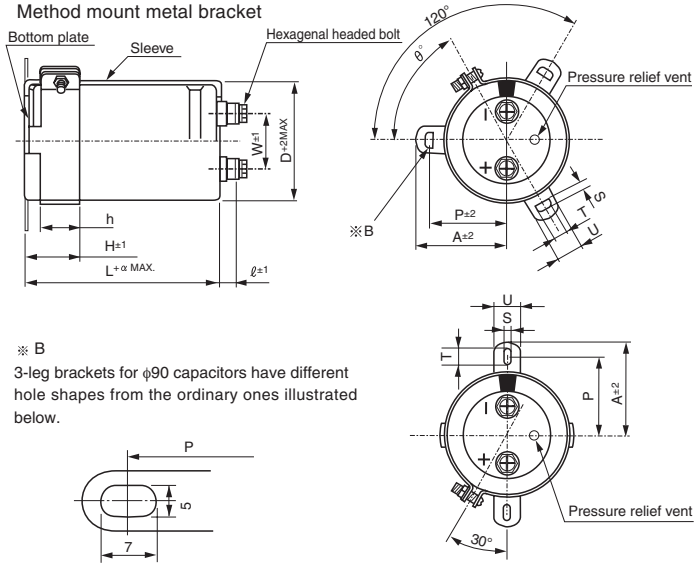

※ B
3-leg brackets for φ90 capacitors have different hole shapes from the ordinary ones illustrated below.

Type numbering system (Example : 450V 2200μF)

1	2	3	4	5	6	7	8	9	10	11	12	13	14
L	N	X	2	W	2	2	2	M	S	E			

Mounting bracket
(φ 51 to φ 90): Code less 3-leg brackets; BB 2-leg brackets; BN No brackets
Case dia. code

φD	Code
51	F
63.5	G
76.2	H
90	J
100	K

(φ 100): Code less 3-leg brackets; BN No brackets
Configuration※
Capacitance tolerance (±20%)
Rated Capacitance (2200μF)
Rated voltage (450V)
Series name
Type

※Configuration

Cr (III) Plating (RoHS compliant)
SE

Please refer to page 328 for schematic of dimensions.
※ Please contact to us if PVCless products are required.

● Dimension of terminal pitch (W) and length (ℓ) and Nominal dia.of bolt (mm)

φD	W	ℓ	α	Nominal dia. of bolt
51	22.0	6	3	M5
63.5	28.6	6	3	M5
76.2	31.8	6	3	M5
90	31.8	6	3	M5
100	41.5	10	4	M8

● Dimensions of mounting bracket (mm)

Leg shape / Symbol \ φD	3–Leg					2–Leg			
	51	63.5	76.2	90	100	51	63.5	76.2	90
P	32.5	38.1	44.5	50.8	56.3	33.2	40.5	46.5	53
A	38.5	43	49.2	58.5	62	40	46.5	53	59
T	7.5	8.0	7.0	8.0	8.0	6.0	7.0	6.0	6.0
S	5.0	5.0	5.0	5.0	5.0	4.5	4.5	4.5	4.5
U	12	14	14	18	16	14	14	14	14
θ °	60	60	60	60	60	30	30	30	30
H	20	25	30	35	36	25	35	35	35
h	15	20	24	25	30	15	20	20	20

● Dimension table in next page.

NX series

■Dimensions

350V (2V)						
Cap. (μF)	Size φD × L(mm)	Standard ripple (Arms) *1	Rated ripple (Arms) *2	tan δ	Leakage Current (mA)	Code
1000	51 × 60	3.5	4.6	0.2	1.77	LNX2V102MSEF
1200	51 × 70	4.2	5.3	0.2	1.94	LNX2V122MSEF
1500	51 × 80	4.9	6.3	0.2	2.17	LNX2V152MSEF
1800	51 × 90	5.6	7.3	0.2	2.38	LNX2V182MSEF
2200	51 × 110	6.7	8.8	0.2	2.63	LNX2V222MSEF
2700	51 × 130	8.0	10.3	0.2	2.91	LNX2V272MSEF
	63.5 × 90	7.7	9.9	0.2	2.91	LNX2V272MSEG
3300	51 × 150	9.2	12.1	0.2	3.22	LNX2V332MSEF
	63.5 × 100	9.0	11.8	0.2	3.22	LNX2V332MSEG
3900	63.5 × 110	10.4	12.5	0.2	3.50	LNX2V392MSEG
	76.2 × 90	10.3	12.2	0.2	3.50	LNX2V392MSEH
4700	63.5 × 130	12.0	14.8	0.2	3.84	LNX2V472MSEG
	76.2 × 100	11.9	14.0	0.2	3.84	LNX2V472MSEH
5600	63.5 × 150	14.0	17.0	0.2	4.20	LNX2V562MSEG
	76.2 × 110	13.5	16.4	0.2	4.20	LNX2V562MSEH
6800	63.5 × 170	16.3	19.6	0.2	4.62	LNX2V682MSEG
	76.2 × 130	16.0	19.1	0.2	4.62	LNX2V682MSEH
8200	76.2 × 150	18.7	22.0	0.2	5.00	LNX2V822MSEH
	90 × 130	18.2	21.4	0.2	5.00	LNX2V822MSEJ
10000	76.2 × 170	21.8	25.5	0.2	5.00	LNX2V103MSEH
	90 × 150	21.3	25.3	0.2	5.00	LNX2V103MSEJ
12000	76.2 × 190	25.1	29.1	0.2	5.00	LNX2V123MSEH
	90 × 150	24.8	28.8	0.2	5.00	LNX2V123MSEJ
15000	90 × 190	29.0	36.0	0.2	5.00	LNX2V153MSEJ
18000	90 × 220	32.4	39.7	0.2	5.00	LNX2V183MSEJ
22000	100 × 220	38.0	43.2	0.2	5.00	LNX2V223MSEK
27000	100 × 250	42.0	47.0	0.2	5.00	LNX2V273MSEK

400V (2G)						
Cap. (μF)	Size φD × L(mm)	Standard ripple (Arms) *1	Rated ripple (Arms) *2	tan δ	Leakage Current (mA)	Code
1000	51 × 70	3.8	5.0	0.2	1.89	LNX2G102MSEF
1200	51 × 80	4.5	5.8	0.2	2.07	LNX2G122MSEF
1500	51 × 100	5.3	6.8	0.2	2.32	LNX2G152MSEF
1800	51 × 110	6.0	8.2	0.2	2.54	LNX2G182MSEF
2200	51 × 130	7.0	9.3	0.2	2.81	LNX2G222MSEF
	63.5 × 90	6.8	8.9	0.2	2.81	LNX2G222MSEG
2700	63.5 × 110	8.2	10.8	0.2	3.11	LNX2G272MSEG
	76.2 × 90	8.1	10.6	0.2	3.11	LNX2G272MSEH
3300	63.5 × 130	9.6	12.9	0.2	3.44	LNX2G332MSEG
	76.2 × 100	9.3	12.4	0.2	3.44	LNX2G332MSEH
3900	63.5 × 150	11.0	14.4	0.2	3.74	LNX2G392MSEG
	76.2 × 100	10.5	13.9	0.2	3.74	LNX2G392MSEH
4700	63.5 × 170	12.6	16.6	0.2	4.11	LNX2G472MSEG
	76.2 × 130	12.3	16.0	0.2	4.11	LNX2G472MSEH
5600	63.5 × 190	14.7	18.8	0.2	4.49	LNX2G562MSEG
	76.2 × 150	14.3	18.3	0.2	4.49	LNX2G562MSEH
6800	76.2 × 170	16.7	21.2	0.2	4.94	LNX2G682MSEH
	90 × 130	16.3	20.7	0.2	4.94	LNX2G682MSEJ
8200	76.2 × 190	19.3	24.1	0.2	5.00	LNX2G822MSEH
	90 × 150	19.0	23.7	0.2	5.00	LNX2G822MSEJ
10000	76.2 × 220	22.7	28.3	0.2	5.00	LNX2G103MSEH
	90 × 170	22.2	28.0	0.2	5.00	LNX2G103MSEJ
12000	90 × 190	25.5	31.9	0.2	5.00	LNX2G123MSEJ
15000	100 × 190	29.6	37.0	0.2	5.00	LNX2G153MSEK
18000	100 × 220	33.0	40.5	0.2	5.00	LNX2G183MSEK
22000	100 × 250	41.4	44.7	0.2	5.00	LNX2G223MSEK

450V (2W)						
Cap. (μF)	Size φD × L(mm)	Standard ripple (Arms) *1	Rated ripple (Arms) *2	tan δ	Leakage Current (mA)	Code
1000	51 × 80	4.0	5.2	0.2	2.01	LNX2W102MSEF
1200	51 × 100	4.7	6.3	0.2	2.20	LNX2W122MSEF
1500	51 × 110	5.4	7.3	0.2	2.46	LNX2W152MSEF
1800	51 × 130	6.4	8.7	0.2	2.70	LNX2W182MSEF
	63.5 × 90	6.1	7.6	0.2	2.70	LNX2W182MSEG
2200	63.5 × 110	7.2	9.6	0.2	2.98	LNX2W222MSEG
	76.2 × 90	7.1	9.4	0.2	2.98	LNX2W222MSEH
2700	63.5 × 130	8.6	11.3	0.2	3.30	LNX2W272MSEG
	76.2 × 100	8.3	11.0	0.2	3.30	LNX2W272MSEH
3300	63.5 × 150	10.0	13.3	0.2	3.65	LNX2W332MSEG
	76.2 × 110	9.7	12.9	0.2	3.65	LNX2W332MSEH
3900	63.5 × 170	11.4	15.1	0.2	3.97	LNX2W392MSEG
	76.2 × 130	11.2	14.6	0.2	3.97	LNX2W392MSEH
4700	63.5 × 190	13.0	17.3	0.2	4.36	LNX2W472MSEG
	76.2 × 150	12.9	16.9	0.2	4.36	LNX2W472MSEH
5600	76.2 × 170	15.4	19.4	0.2	4.76	LNX2W562MSEH
	90 × 150	15.3	19.1	0.2	4.76	LNX2W562MSEJ
6800	76.2 × 190	17.3	22.0	0.2	5.00	LNX2W682MSEH
	90 × 150	17.1	21.6	0.2	5.00	LNX2W682MSEJ
8200	76.2 × 220	20.3	25.7	0.2	5.00	LNX2W822MSEH
	90 × 170	19.8	25.4	0.2	5.00	LNX2W822MSEJ
10000	90 × 190	23.0	29.6	0.2	5.00	LNX2W103MSEJ
12000	90 × 220	26.9	33.5	0.2	5.00	LNX2W123MSEJ
15000	100 × 220	31.1	38.0	0.2	5.00	LNX2W153MSEK
18000	100 × 250	37.0	41.3	0.2	5.00	LNX2W183MSEK

500V (2H)						
Cap. (μF)	Size φD × L(mm)	Standard ripple (Arms) *1	Rated ripple (Arms) *2	tan δ	Leakage Current (mA)	Code
1000	51 × 110	4.2	–	0.2	2.12	LNX2H102MSEF
1200	63.5 × 90	4.8	–	0.2	2.32	LNX2H122MSEG
1500	63.5 × 90	5.5	–	0.2	2.59	LNX2H152MSEG
1800	63.5 × 110	6.5	–	0.2	2.84	LNX2H182MSEG
2200	63.5 × 130	7.7	–	0.2	3.14	LNX2H222MSEG
2700	76.2 × 110	8.8	–	0.2	3.48	LNX2H272MSEH
3300	76.2 × 130	10.4	–	0.2	3.85	LNX2H332MSEH
3900	76.2 × 150	12.1	–	0.2	4.18	LNX2H392MSEH
4700	90 × 130	13.7	–	0.2	4.59	LNX2H472MSEJ
5600	90 × 150	15.9	–	0.2	5.00	LNX2H562MSEJ
6800	90 × 170	18.5	–	0.2	5.00	LNX2H682MSEJ
8200	90 × 190	21.4	–	0.2	5.00	LNX2H822MSEJ
10000	100 × 190	23.8	–	0.2	5.00	LNX2H103MSEK
12000	100 × 220	27.8	–	0.2	5.00	LNX2H123MSEK

Ripple current (Arms) at 85°C 120Hz

NX series

■Dimensions

550V (2L)						
Cap. (μF)	Size φD × L(mm)	Standard ripple (Arms) ※1	Rated ripple (Arms) ※2	tan δ	Leakage Current (mA)	Code
1000	51 × 130	4.3	–	0.2	2.22	LNX2L102MSEF
1200	63.5 × 110	5.0	–	0.2	2.43	LNX2L122MSEG
1500	63.5 × 130	6.0	–	0.2	2.72	LNX2L152MSEG
1800	76.2 × 110	6.7	–	0.2	2.98	LNX2L182MSEH
2200	76.2 × 130	8.0	–	0.2	3.30	LNX2L222MSEH
2700	76.2 × 150	9.4	–	0.2	3.65	LNX2L272MSEH
3300	76.2 × 170	11.0	–	0.2	4.04	LNX2L332MSEH
3900	90 × 150	12.5	–	0.2	4.39	LNX2L392MSEJ
4700	90 × 170	14.5	–	0.2	4.82	LNX2L472MSEJ
5600	90 × 190	16.6	–	0.2	5.00	LNX2L562MSEJ
6800	90 × 220	19.5	–	0.2	5.00	LNX2L682MSEJ
8200	100 × 220	21.6	–	0.2	5.00	LNX2L822MSEK
10000	100 × 250	25.2	–	0.2	5.00	LNX2L103MSEK

630V(2J)						
Cap. (μF)	Size φD × L(mm)	Standard ripple (Arms) ※1	Rated ripple (Arms) ※2	tan δ	Leakage Current (mA)	Code
1000	63.5 × 130	5.9	–	0.3	2.38	LNX2J102MSEG
1200	76.2 × 110	6.7	–	0.3	2.60	LNX2J122MSEH
1500	76.2 × 130	8.1	–	0.3	2.91	LNX2J152MSEH
1800	76.2 × 150	9.6	–	0.3	3.19	LNX2J182MSEH
2200	90 × 130	10.7	–	0.3	3.53	LNX2J222MSEJ
2700	90 × 150	12.6	–	0.3	3.91	LNX2J272MSEJ
3300	90 × 170	14.7	–	0.3	4.32	LNX2J332MSEJ
3900	90 × 190	17.3	–	0.3	4.70	LNX2J392MSEJ
4700	100 × 220	21.4	–	0.3	5.00	LNX2J472MSEK
5600	100 × 250	24.7	–	0.3	5.00	LNX2J562MSEK

Ripple current (Arms) at 85°C 120Hz

● Frequency coefficient of rated ripple current

Frequency (Hz)	50	60	120	360	1k	10k or more
Coefficient	0.80	0.82	1.00	1.20	1.35	1.40

(※ 1) • Standard ripple current:
Ripple current value allowable for the life time of 20,000 hours at 85°C.
(5,000 hours at 85°C for the voltage rating of 500V and 550V. 2,000 hours at 85°C for the voltage rating of 630V)

(※ 2) • Maximum rated ripple current:
Ripple current value allowable for the life time of 5,000 hours at 85°C.

• 3-leg bracket is furnished as standard.
In case no-bracket or 2-leg bracket required, please put BN or BB at the and of type number.

Ex. 3-leg bracket LNX2G472MSEH
2-leg bracket LNX2G472MSEHBB
No bracket LNX2G472MSEHBN

• Flame-retardant type electrolyte is also available.
Please contact to Nichicon representative for the rated ripple current value.

Mouser Electronics

Authorized Distributor

Click to View Pricing, Inventory, Delivery & Lifecycle Information:

Nichicon:

LNX2G102MSEF LNX2G103MSEH LNX2G103MSEJ LNX2G122MSEF LNX2G123MSEJ LNX2G152MSEF LNX2G153MSEK LNX2G182MSEF LNX2G183MSEK LNX2G222MSEF LNX2G222MSEG LNX2G223MSEK LNX2G272MSEG LNX2G272MSEH LNX2G332MSEG LNX2G332MSEH LNX2G392MSEG LNX2G392MSEH LNX2G472MSEG LNX2G472MSEH LNX2G562MSEG LNX2G562MSEH LNX2G682MSEH LNX2G682MSEJ LNX2G822MSEH LNX2G822MSEJ LNX2H102MSEF LNX2H103MSEK LNX2H122MSEG LNX2H123MSEK LNX2H152MSEG LNX2H182MSEG LNX2H222MSEG LNX2H272MSEH LNX2H332MSEH LNX2H392MSEH LNX2H472MSEJ LNX2H562MSEJ LNX2H682MSEJ LNX2H822MSEJ LNX2J102MSEG LNX2J122MSEH LNX2J152MSEH LNX2J182MSEH LNX2J222MSEJ LNX2J272MSEJ LNX2J332MSEJ LNX2J392MSEJ LNX2J472MSEK LNX2J562MSEK LNX2L102MSEF LNX2L103MSEK LNX2L122MSEG LNX2L152MSEG LNX2L182MSEH LNX2L222MSEH LNX2L272MSEH LNX2L332MSEH LNX2L392MSEJ LNX2L472MSEJ LNX2L562MSEJ LNX2L682MSEJ LNX2L822MSEK LNX2V102MSEF LNX2V103MSEH LNX2V103MSEJ LNX2V122MSEF LNX2V123MSEH LNX2V123MSEJ LNX2V152MSEF LNX2V153MSEJ LNX2V182MSEF LNX2V183MSEJ LNX2V222MSEF LNX2V223MSEK LNX2V272MSEF LNX2V272MSEG LNX2V273MSEK LNX2V332MSEF LNX2V332MSEG LNX2V392MSEG LNX2V392MSEH LNX2V472MSEG LNX2V472MSEH LNX2V562MSEG LNX2V562MSEH LNX2V682MSEG LNX2V682MSEH LNX2V822MSEH LNX2V822MSEJ LNX2W102MSEF LNX2W103MSEJ LNX2W122MSEF LNX2W123MSEJ LNX2W152MSEF LNX2W153MSEK LNX2W182MSEF LNX2W182MSEG LNX2W183MSEK LNX2W222MSEG