SmartGen

MAKING CONTROL SMARTER

HGM6100N SERIES

(HGM6110N/6120N/6110NC/6120NC)

GENSET CONTROLLER

USER MANUAL





郑州众智科技股份有限公司

SMARTGEN(ZHENGZHOU)TECHNOLOGY CO.,LTD.

SmartGen **Registered trademark**
No. 28 Xuemei Street, Zhengzhou, Henan, China
Tel: +86-371-67988888/67981888/67992951/67981000(overseas)
Fax: +86-371-67992952
Web: www.smartgen.com.cn www.smartgen.cn
Email: sales@smartgen.cn

All rights reserved. No part of this publication may be reproduced in any material form (including photocopying or storing in any medium by electronic means or other) without the written permission of the copyright holder.
SmartGen reserves the right to change the contents of this document without prior notice.

SmartGen

Table 1 – Software Version

Date	Version	Note
2016-06-18	1.0	Original Release
2017-05-22	1.1	Changed back panel picture of controller; Modified Insulation Intensity description.
2018-08-02	1.2	Configuration parameters were added in table 7; Modified front panel drawing and keys description.
2019-03-28	1.5	Fixed HGM6110CAN, HGM6120NC application diagram error; Added configuration parameters of active power loading percentage; Fixed crank disconnect conditions conforming to the controller; Fixed LCD contrast ratio description; Fixed Table 5 as Shutdown Alarms;
2020-08-18	1.6	Deleted “Table 5” of “7.5 CONDITIONS OF CRANK DISCONNECT (Table 5)”.
2020-09-10	1.7	Modified the terminal number of output port 2 of typical application diagrams.
2021-06-22	1.8	Deleted MTU MDEC wiring diagram; Added partial parameters.
2022-06-09	1.9	Updated the Logo of SmartGen.
2023-01-13	2.0	Unified the controller’s name and updated company address information.
2023-05-15	2.1	Added configurations of output port.
2023-10-16	2.2	Modified the description of raise and drop speed and inputs; Modified the description of remote control input;

Date	Version	Note
		Added the RS485 baud rate setting and new AC system option (3P4W-ANC) in Table 7; Added new outputs in Table 8: ECU Running Output and Fuel 1 Output.
2025-02-12	2.3	Delete related description of HGM6100CAN series and modify the model to HGM6100N series; Add the description of event log limit; Update the table of warnings/shutdown alarms/parameter configurations/definable contents of programmable output/input ports.
2026-08-31	2.4	Added new function descriptions and parameter descriptions.

SmartGen

CONTENTS

1 OVERVIEW 5
2 PERFORMANCE AND CHARACTERISTICS 5
3 SPECIFICATIONS 7
4 OPERATION 8
4.1 KEYS DESCRIPTION 8
4.2 CONTROLLER PANEL 9
4.3 AUTOMATIC START/STOP OPERATION 10
4.4 MANUAL START/STOP OPERATION 11
4.5 EMERGENCY START 11
5 PROTECTION 12
5.1 WARNINGS 12
5.2 SHUTDOWN ALARMS 14
6 CONNECTIONS 16
7 PARAMETER RANGE AND DEFINITION 18
7.1 PARAMETER CONTENT AND RANGE TABLE 18
7.2 DEFINED CONTENTS OF PROGRAMMABLE OUTPUT 1-4 23
7.3 DEFINED CONTENTS OF PROGRAMMABLE INPUT 1-5 25
7.4 SENSOR SELECTION 27
7.5 CONDITIONS OF CRANK DISCONNECT SELECTION 28
8 PARAMETER SETTING 29
9 SENSOR SETTING 30
10 COMMISSIONING 31
11 TYPICAL APPLICATION 32
12 INSTALLATION 34
12.1 FIXING CLIPS 34
12.2 OVERALL DIMENSION AND PANEL CUTOUT 34
13 FAULT FINDING 35

SmartGen

1 OVERVIEW

HGM6100N series genset controller, integrating digital, intelligent and network techniques, is used for automatic control and monitoring system of single genset. It can carry out functions of automatic start/stop, data measurement, alarm protection and "three remote" (remote control, remote measurement and remote communication). The controller uses LCD display, optional language interface including Chinese, English, Spanish, Russian, Portuguese, Turkish, Polish and French with easy and reliable operation.

HGM6100N series genset controller uses micro-processing technique which can achieve precision measurement, value adjustment, timing and threshold setting etc. All the parameters can be configured from front panel or use USB interface (or RS485 interface) to adjust via PC. It can be widely used in all types of automatic control system for its compact structure, simple connections and high reliability.

2 PERFORMANCE AND CHARACTERISTICS

HGM6100N controller has four variants:

HGM6110N/6110NC: Automatic Start Module, it controls generator to start/stop by remote start signal;

HGM6120N/6120NC: Based on **HGM6110N/6110NC**, it adds mains AC monitoring and mains/generator automatic switching control (AMF), especially suitable for the automation system composed by mains and genset.

NOTE1: HGM6110NC/6120NC has RS485 port, **HGM6110N/6120N** without.
HGM6110N/6120N and **HGM6110NC/6120NC** without CAN port.

NOTE2: HGM6110/6120 is taken as an example to describe in this manual.

Main characteristics are as following:

- 132x64 LCD display with backlight, optional language interface (Chinese, English, Spanish, Russian, Portuguese, Turkey, Polish and French), push-button operation;
- Acrylic screen, improved wearable and scratch resistance property;
- Silica-gel panel and keys can well adapt to higher and lower temperature;
- RS485 communication port enables "three remote" functions via MODBUS protocol;
- Adapt to 3P4W, 3P3W, 1P2W and 2P3W (120V/240V), 50Hz/60Hz system;
- Can measure and display 3 phase voltage, 3 phase current, frequency, power parameter of mains/gens;

Mains	**Generator**
Line voltage (Uab, Ubc, and Uca)	Line voltage (Uab, Ubc, and Uca)
Phase voltage (Ua, Ub, and Uc)	Phase voltage (Ua, Ub, and Uc)
Frequency Hz	Frequency Hz
Phase sequence	Phase sequence

Load

Current IA, IB, IC
Each and total active power kW
Reactive power kvar
Apparent power kVA
Power factor PF
Generator accumulated energy kWh

Output percentage with load %

- For mains, genset has functions of over/under voltage and loss of phase; For gens, genset has functions of over/under voltage, over/under frequency, over current and over power;
- Precision measure and display of parameters about engine;

  Temp. (WT) °C/°F
  Oil pressure (OP) kPa/psi/bar
  Fuel level (FL) % Fuel remains L
  Speed (SPD) r/min
  Battery Voltage (VB) V
  Charger Voltage (VD) V
  Accumulated running hours
  Accumulated start times
- Control and protection function: Automatic start/stop of genset, load transfer (ATS control) and perfect fault display and protection;
- With ETS, idle control, pre-heat control, speed raise/drop control, all of them are relay outputs;
- Parameter setting: Allow user to modify setting and store them in internal FLASH memory. The parameters cannot be lost even when power off. All of parameters can be set not only from the front panel, but also adjusted through USB interface (or RS485 interface) via PC;
- Multiple sensors of temperature, pressure and fuel level can be used directly, parameters can be defined by user;
- Multiple conditions of crank disconnect (speed, oil pressure, frequency) can be selected;
- With emergency start function;
- With flywheel teeth numbers automatic identification function;
- Power supply range: (8~35)VDC, accommodating to different starting battery voltage environment;
- Event log function (max.80 items);
- All parameters use digital modulation, instead of analog modulation using conventional potentiometer, having improved reliability and stability;
- With maintenance function. Types (date or running time) can be selected and actions (warning or alarm shutdown) can be set when maintenance time out;
- Event log, real-time clock, scheduled start & stop function (can be set as start unit once a day/week/month whether with load or not);
- Add rubber gasket between shell and controller screen, the waterproof can reach IP65;
- Controller is fixed by metal fixing clips;
- Modular design, flame-retardant ABS shell, pluggable terminal, embedded mounting, compact structure and easy installation.

3 SPECIFICATIONS

Table 2 – Technical Parameters

Items	Contents
Working Voltage	DC8.0V to DC35.0V, continuous
Power Consumption	<3W (Standby mode: ≤2W)
AC System 3P4W 3P3W 1P2W 2P3W	 AC15V - AC360V (ph-N) AC30V - AC620V (ph-ph) AC15V - AC360V (ph-N) AC15V - AC360V (ph-N)
AC Alternator Frequency	50Hz/60Hz
Speed Sensor Voltage	1.0V to 24V (RMS)
Speed Sensor Frequency	10,000 Hz (max.)
Start Relay Output	16A DC28V at supply voltage
Fuel Relay Output	16A DC28V at supply voltage
Auxiliary Relay Output 1	7A DC28V at supply voltage
Auxiliary Relay Output 2	7A AC250V volt-free output
Auxiliary Relay Output 3	16A AC250V volt-free output
Auxiliary Relay Output 4	16A AC250V volt-free output
Overall Dimensions	209mm x 166mm x 45mm
Panel Cutout	186mm x 141mm
C.T. Secondary Current	5A (rated)
Working Temperature	(-25~+70)°C
Working Humidity	(20~93)%RH
Storage Temperature	(-30~+80)°C
Protection Level	IP65: when water-proof gasket installed between control panel and enclosure.
Insulation Intensity	Apply AC2.2kV voltage between high voltage terminal and low voltage terminal. The leakage current is not more than 3mA within 1min.
Weight	0.56kg

4 OPERATION

4.1 KEYS DESCRIPTION

Table 3 – Keys Description

Icon	Key	Description
	Stop/Reset	Can stop generator under Manual/Auto mode; Can reset shutdown alarm; Press this key at least 3 seconds to test panel indicators are OK or not (lamp test); During stopping process, press this key again can stop generator immediately.
	Start	Start genset under Manual mode; Press this key during starting process, genset will jump to next status.
	Manual	Pressing this key will set the module as Manual mode.
	Auto	Pressing this key will set the module as Auto mode.
	Close/Open	Can control gens to switch on or off in Manual mode. **Note:** The key is fit for HGM6120 series controllers.
	Close	Can control gens to switch on in Manual mode. **Note:** The key is fit for HGM6110 series controllers.
	Open	Can control gens to switch off in Manual mode. **Note:** The key is fit for HGM6110 series controllers.
	Set/Confirm	Press this key to enter menu interface; Shift cursor to confirm in parameters setting menu.
	Up/Increase	Screen scroll; Up cursor and increase value in setting menu.
	Down/Decrease	Screen scroll; Down cursor and decrease value in setting menu.
	Home/Return	Return to homepage when in main interface; Exit when in parameters setting interface.

4.2 CONTROLLER PANEL



Fig.1 – HGM6110 (HGM6110N/NC) Front Panel Indication



Fig.2 – HGM6120 (HGM6120N/NC) Front Panel Indication

NOTE: Partial indicator states:

Alarm Indicator: slowly blink when warning alarms; fast blink when shutdown alarms; won't illuminate when there is no alarm.

Status Indicator: won't illuminate when genset stand by; blink 1 time per second in start or stop process and always illuminate when runs normally.

4.3 AUTOMATIC START/STOP OPERATION

Auto mode is activated by pressing the , LED indicator beside the key is illuminating which confirms this action.

Starting Sequence

1) **HGM6120:** When mains is abnormal (over/under voltage, loss of phase), it enters into “Mains Abnormal Delay” and LCD displays count-down time. When delay is over, “Start Delay” begins.
2) **HGM6110:** When “remote start” input is active, it enters into “Start Delay”.
3) “Count- down” of start delay is displayed in LCD.
4) When start delay is over, preheat relay is outputting (if configured), “Preheat Delay XX s” is displayed in LCD.
5) When preheat delay is over, after fuel relay is outputting for XXs and then start relay outputs; if genset failed to start during “Crank Time”, the fuel and start relay stop outputting and enter into “Crank Rest Time” and wait for next cranking.
6) If genset failed to start within set start times, the fifth line of LCD will turn black and Fail to Start alarm will be displayed.
7) Any time to start genset successfully, it will enter into “Safety Running”. During this period, alarms of low oil pressure, high temperature, under speed, failed to charge and Aux. input (be configured) are disabled. As soon as this delay is over, genset will enter into “Start Idle Delay” (if configured).
8) During start idle delay, alarms of under speed, under frequency, under voltage are disabled. As soon as this delay is over, genset will enter into “Warming Up Delay” (if configured).
9) When “Warming Up Delay” is over, the indicator is illuminating if gens normal. If voltage and frequency of genset reach the load requirement, close relay outputs, genset is taking load and indicator illuminates; if voltage or frequency is abnormal, controller will alarm and shutdown (LCD displays the alarm information).

Stopping Sequence

1) **HGM6120:** During normal running, if mains normal, genset will enter into “Mains Normal Delay”, when mains indicator illuminates, “Stop Delay” begins.
2) **HGM6110:** Genset enters into “Stop Delay” as soon as “Remote Start” is inactive.
3) When “Stop Delay” is over, genset enters into “Cooling Delay”. Closing relay is disconnected. After switch “Transfer Delay”, closing relay is outputting, mains is taking load, generator indicator extinguishes while mains indicator illuminates.
4) When entering “Stop Idle Delay” (if configured), idle relay is energized to output.
5) When entering “ETS Delay”, ETS relay is energized to output, fuel relay output is disconnected.
6) When entering “Genset After Stop Time”, genset will automatically judge if it has stopped.
7) When genset has stopped, it enters into standby mode; if genset failed to stop, controller will send alarms (“Fail to Stop” alarm will be displayed in LCD).

4.4 MANUAL START/STOP OPERATION

1) **HGM6120:** Manual Mode is active when press  and its indicator illuminates. Under this mode, press  to start genset, it can automatically detect crank disconnect and accelerate to high speed running. If there is high temperature, low oil pressure, over speed and abnormal voltage during genset running, controller can protect genset to stop (detail procedures please refer to No.4~9 of Auto start operation). Under Manual Mode, switch won't transfer automatically, it is necessary to press  to transfer load.

2) **HGM6110:** Manual Mode is active when pressing  , and its indicator is illuminating. Then press  to start genset, it can automatically detect crank disconnect and accelerate to high speed running. If there is high temperature, low oil pressure, over speed and abnormal voltage during running, controller can protect genset to stop quickly (detail procedures please refer to No.4~9 of Auto start operation). After genset runs well in high speed, press  and gens takes load.

3) **Manual Stop:** Pressing  can shut down the running genset (detail procedures please refer to No.3~7 of Auto stop operation).

4.5 EMERGENCY START

In manual mode, pressing  and  simultaneously can compel genset to start. The controller won't judge whether the controller has started successfully according to disconnect conditions and the disconnection of starter needs to be controlled by operators. When operators observed the genset has started successfully, loose the keys and the controller enters safety delay with start no outputting.

5 PROTECTION

5.1 WARNINGS

When controller detects the warning signal, the genset only sends alarm and not stops. The alarms are displayed in LCD.

Table 4 – Controller Warning Alarms

No.	Items	Description
1	Loss of Speed Signal	When the speed of genset is 0 and speed loss delay is 0, controller will send warning alarm signal and it will be displayed in LCD.
2	Genset Over Current	When the current of genset is higher than threshold, over current type is DMT and delay is 0, controller will send warning alarm signal and it will be displayed in LCD.
3	Fail to Stop	When genset cannot stop when ETS delay/after stop delay is over, controller will send warning alarm signal and it will be displayed in LCD.
4	Low Fuel Level	When the fuel level of genset is lower than threshold or low fuel level warning is active, controller will send warning alarm signal and it will be displayed in LCD.
5	Fail to Charge	During genset normal running process, when the voltage difference between B+ and the charger D+ (WL) is above the Failed to Charge voltage difference for 5s, the controller shall issue “Failed to Charge” warning, while at the same time LCD displays “Failed to Charge” warning.
6	Battery Under Voltage	When the battery voltage of genset is lower than threshold, controller will send warning alarm signal and it will be displayed in LCD.
7	Battery Over Voltage	When the battery voltage of genset is higher than threshold, controller will send warning alarm signal and it will be displayed in LCD.
8	Low Coolant Level	When low coolant level input is active, controller will send warning alarm signal and it will be displayed in LCD.
9	Temp. Sensor Open	When sensor hasn’t connected to corresponding port, controller will send warning alarm signal and it will be displayed in LCD.
10	Oil Pressure Sensor Open	When sensor hasn’t connected to corresponding port, controller will send warning alarm signal and it will be displayed in LCD.
11	Maintenance Due Warning	Maintenance type is running time. When genset running time is longer than maintenance time of user setting, or the maintenance type is date, the current date is over the setting date and the maintenance action is set as warning, controller sends warning alarm signal and it will be displayed in LCD.
12	High Temp.	When the water/cylinder temperature of genset is higher than or equal to the preset high temperature warning value (High Temp. Stop Inhibit is disabled and Inhibit WTH STOP input is inactive) or the water/cylinder temperature is higher than the preset threshold (High Temp. Stop Inhibit is enabled and Inhibit WTH STOP input is active), controller will send warning alarm signal and it will be displayed in LCD.

No.	Items	Description
13	Low Oil Pressure	When the oil pressure of genset is less than or equal to the preset low oil pressure warning value (Low OP Stop Inhibit is disabled and Inhibit OPL STOP input is inactive) or the oil pressure is less than the preset threshold (Low OP Stop Inhibit is enabled and Inhibit OPL STOP input is active), controller will send warning alarm signal and it will be displayed in LCD.
14	External Warning	When external input is active, controller will send warning alarm signal and it will be displayed in LCD.
15	Failed to Charge	When “Failed to Charge” input is active, controller will send warning alarm signal and it will be displayed in LCD.
16	Over Power	If over power detection is enabled, when the controller detects that the power value (power is positive) has exceeded the pre-set value and the action selects “Warn”, it will initiate a warning alarm.
17	Leakage Warning	If controller detects that the leakage warning input is active, controller will initiate a warning alarm and it will be displayed in LCD.

SmartGen

5.2 SHUTDOWN ALARMS

When controller detects shutdown alarm, it will send signal to open and stop genset. The alarms are displayed in LCD.

Table 5 – Shutdown Alarms

No.	Items	Description
1	Emergency Stop	When controller detects emergency stop signal, it will send shutdown alarm signal and it will be displayed in LCD.
2	High Temp.	When the temperature of water/cylinder is higher than set threshold, controller will send shutdown alarm signal and it will be displayed in LCD.
3	Low Oil Pressure	When oil pressure is lower than threshold, controller will send shutdown alarm signal and it will be displayed in LCD.
4	Over Speed	When genset speed is higher than set threshold, controller will send shutdown alarm signal and it will be displayed in LCD.
5	Under Speed	When genset speed is lower than set threshold, controller will send shutdown alarm signal and it will be displayed in LCD.
6	Loss of Speed Signal	When the speed is 0 and delay is not 0, controller will send shutdown alarm signal and it will be displayed in LCD.
7	Gen Over Voltage	When genset voltage is higher than threshold, controller will send shutdown alarm signal and it will be displayed in LCD.
8	Gen Under Voltage	When genset voltage is under set threshold, controller will send shutdown alarm signal and it will be displayed in LCD.
9	Gen Over Current	When genset current is higher than set threshold and delay is not 0, it will send shutdown alarm signal and it will be displayed in LCD.
10	Fail to Start	If controller fails to start within set start times, it will send shutdown alarm signal and it will be displayed in LCD.
11	Gen Over Frequency	When genset frequency is higher than set threshold, controller will send shutdown alarm signal and it will be displayed in LCD.
12	Gen Under Frequency	When genset frequency is lower than set threshold, controller will send shutdown alarm signal and it will be displayed in LCD.
13	Genset Failed	When genset frequency is 0, controller will send shutdown alarm signal and it will be displayed in LCD.
14	Low Fuel Level	When fuel level low input is active, controller will send shutdown alarm signal and it will be displayed in LCD.
15	Low Coolant Level	When genset coolant level low input is active, controller will send shutdown alarm signal and it will be displayed in LCD.
16	Temp. Sensor Open	When sensor hasn't connected to corresponding port, controller will send shutdown alarm signal and it will be displayed in LCD.
17	Oil Pressure Sensor Open	When sensor hasn't connected to corresponding port, controller will send shutdown alarm signal and it will be displayed in LCD.
18	Maintenance Due	Maintenance type is running time. When genset running time is longer than maintenance time of user setting, or the maintenance type is date,

No.	Items	Description
		the current date is over the setting date and the maintenance action is set as shutdown, controller sends warning alarm signal and it will be displayed in LCD. Maintenance alarm can be reset by setting parameters via passwords.
19	External Shutdown	When external input is active, controller will send shutdown alarm signal and it will be displayed in LCD.
20	Over Power	If over power detection is enabled, when the controller detects that the power value (power is positive) has exceeded the pre-set value and the action selects “Shutdown”, it will initiate shutdown alarm.
21	Over Current Fault	If controller detects that the over current fault shutdown input is active, controller will initiate a shutdown alarm and it will be displayed in LCD.
22	Over Speed Shutdown Input Alarm	If controller detects that the over speed shutdown input is active, controller will initiate shutdown alarm and it will be displayed in LCD.
23	Low OP Shutdown	When controller detects that low oil pressure shutdown alarm is active, controller will initiate shutdown alarm and it will be displayed in LCD.
24	Leakage Shutdown	When controller detects that the leakage shutdown alarm is active, controller will initiate shutdown alarm and it will be displayed in LCD.

NOTE: ECU warning and Shutdown alarm explanation: check engine according to detailed alarm contents; otherwise check engine user manual according to SPN alarm code for gaining information.

SmartGen

6 CONNECTIONS

Compared with HGM6120, HGM6110 doesn't have 3-phase input terminal of mains voltage. The back panel of HGM6120 is as below.

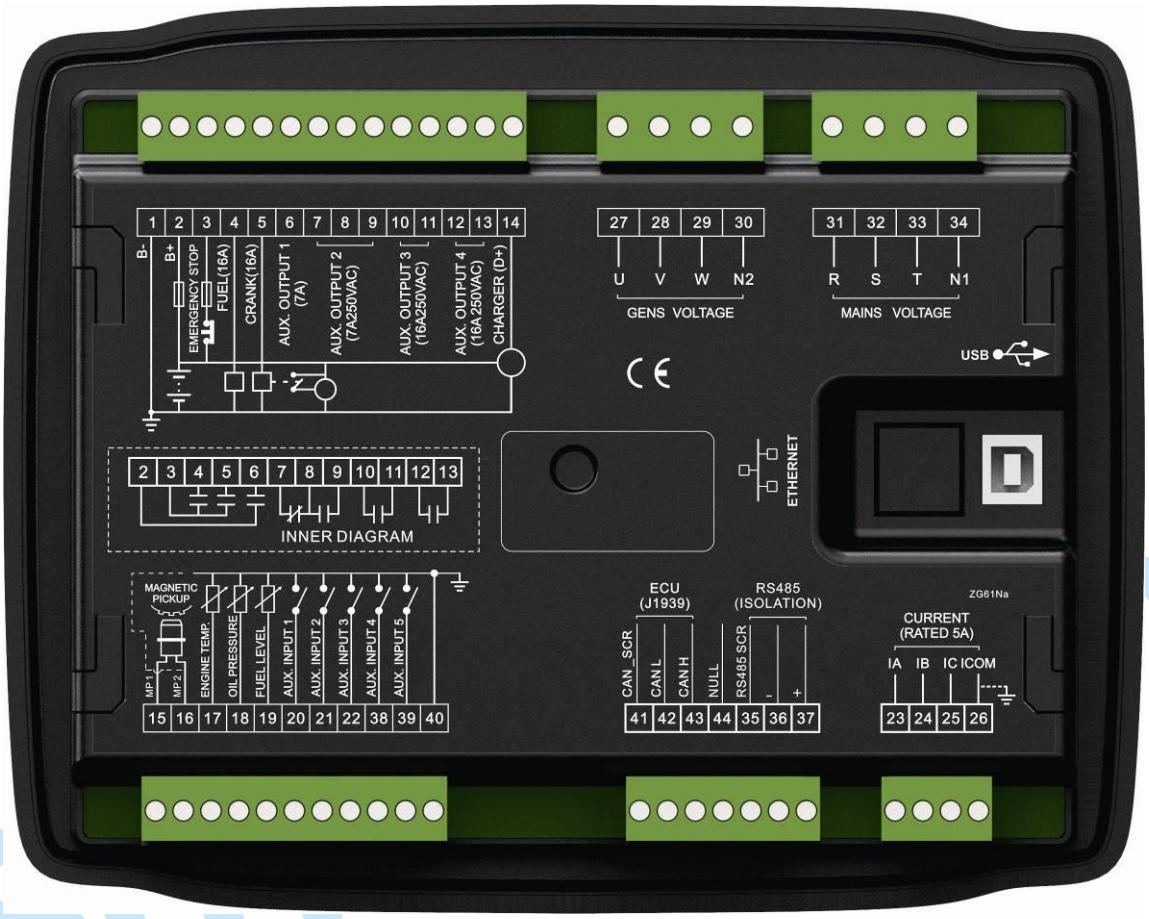

Fig.3 – Controller Rear Panel Drawing

Table 6 – Terminal Connection Description

No.	Function	Cable Size	Description	
1	DC input B-	2.5mm²	Connected to negative of starter battery.	
2	DC input B+	2.5mm²	Connected to positive of starter battery. If wire length is over 30m, better to double wires in parallel. Max. 20A fuse is recommended.	
3	Emergency Stop	2.5mm²	Connected to B+ via emergency stop button.	
4	Fuel Relay Output	1.5mm²	B+ is supplied by 3 points, rated 16A.	
5	Start Relay Output	1.5mm²	B+ is supplied by 3 points, rated 16A Connect to starter coil.	
6	Aux. Relay Output 1	1.5mm²	B+ is supplied by 2 points, rated 7A.	Reference Table 8.
7	Aux. Relay Output 2	1.5mm²	Normal close output, 7A rated.	
8			Relay common port.	
9			Normal open output, 7A rated.	
10	Aux. Relay Output 3	2.5mm²	Relay normal open volt-free contact output.	
11				

No.	Function	Cable Size	Description	
12	Aux. Relay Output 4	2.5mm²	16A rated.	
13				
14	Charger D+ Input	1.0mm²	Connect to D+ (WL) terminal. If without, the terminal is hung up.	
15	Speed Sensor Input	0.5mm²	Connected to speed sensor, shielding line is recommended.	
16	Speed Sensor Input (B- connected inside)			
17	Temp. Sensor Input	1.0mm²	Connect to water/cylinder temp. resistance type sensor.	Reference Table 10.
18	Oil Pressure Sensor Input	1.0mm²	Connect to oil pressure resistance type sensor.	
19	Fuel Level Sensor Input	1.0mm²	Connect to fuel level resistance type sensor.	
20	Aux. Input 1	1.0mm²	Ground connected is active (B-).	Reference Table 9
21	Aux. Input 2	1.0mm²	Ground connected is active (B-).	
22	Aux. Input 3	1.0mm²	Ground connected is active (B-).	
23	CT A Phase Sensing Input	1.5mm²	Connect secondary coil (rated 5A).	
24	CT B Phase Sensing Input	1.5mm²	Connect secondary coil (rated 5A).	
25	CT C Phase Sensing Input	1.5mm²	Connect secondary coil (rated 5A).	
26	CT Common Port	1.5mm²	Refer to INSTALLATION description.	
27	Gens U phase Voltage Sensing Input	1.0mm²	Connect to U phase output (2A fuse is recommended).	
28	Gens V phase Voltage sensing Input	1.0mm²	Connect to V phase output (2A fuse is recommended).	
29	Gens W phase Voltage Sensing Input	1.0mm²	Connect to W phase output (2A fuse is recommended).	
30	Gens N2 Input	1.0mm²	Connect to generator N-wire.	
31	Mains R phase Voltage Sensing Input	1.0mm²	Connect to mains R phase (2A fuse is recommended) **HGM6110** without	
32	Mains S phase Voltage Sensing Input	1.0mm²	Connect to mains S phase (2A fuse is recommended) **HGM6110** without.	
33	Mains T phase Voltage Sensing Input	1.0mm²	Connect to mains T phase, (2A fuse is recommended) **HGM6110** without.	
34	Mains N1 Input	1.0mm²	Connect to mains N-wire, **HGM6110** without.	
35	RS485 Common Ground	/	Impedance-120Ω shielding wire is recommended, its single-end connect with ground.	
36	RS485-	0.5mm²		
37	RS485+	0.5mm²		
38	Aux. Input 4	1.0mm²	Ground connected is active (B-).	Reference Table 9
39	Aux. Input 5	1.0mm²	Ground connected is active (B-).	
40	Sensor Common	1.0mm²	Sensor common port.	
41	CAN COM	0.5mm²	HGM6110N/NC and HGM6120N/NC do not support this function.	
42	CAN L	0.5mm²		

No.	Function	Cable Size	Description
43	CAN H	0.5mm^2	
44	NULL		

NOTE: USB ports in controller rear panel are programmable parameter ports; user can directly program via PC.

7 PARAMETER RANGE AND DEFINITION

7.1 PARAMETER CONTENT AND RANGE TABLE

Table 7 – Parameter Content and Range

No.	Items	Range	Default	Description
1	Mains Normal Delay	(0-3600)s	10	The delay from abnormal to normal or from normal to abnormal. It is used for ATS (automatic transfer switch) control.
2	Mains Abnormal Delay	(0-3600)s	5	
3	Mains Under Voltage	(30-60000)V	184	When mains voltage is under the point, mains under voltage active. When the value is 30, mains under voltage disabled. Return difference is 10V.
4	Mains Over Voltage	(30-60000)V	276	When mains voltage is greater than the point, mains over voltage active. When the point is 60000V, mains over voltage disabled. Return difference is 10V.
5	Transfer Delay	(0-99.9)s	1.0	It's the delay from mains open to generator closed or from generator open to mains closed.
6(1)	Start Delay	(0-3600)s	1	Time from mains abnormal or remote start signal is active to start genset.
7(2)	Stop Delay	(0-3600)s	1	Time from mains normal or remote start signal is inactive to stop genset.
8(3)	Start Times	(1-10) times	3	When engine start failure, it's the maximum cranking times. When setting crank times out, controller sends start fail signal.
9(4)	Preheat Delay	(0-300)s	0	Time of pre-powering heat plug before starter is powered up.
10(5)	Cranking Time	(3-60)s	8	Time of starter power up each time.
11(6)	Crank Rest Time	(3-60)s	10	The second waiting time before power up when engine start fail.
12(7)	Safety On Time	(1-60)s	10	Alarm for low oil pressure, high temp, under speed, under frequency/voltage, failed to charge are all inactive.
13(8)	Start Idle Time	(0-3600)s	0	Idle running time of genset when starting.
14(9)	Warming Up Time	(0-3600)s	10	Warming time between genset switch on and high speed running.

No.	Items	Range	Default	Description
15(10)	Cooling Time	(3-3600)s	10	Time for cooling before stopping.
16(11)	Stop Idle Time	(0-3600)s	0	Idle running time when genset stop.
17(12)	ETS Solenoid Hold	(0-120)s	20	Stop electromagnet's power-on time when genset is stopping.
18(13)	Wait for Stop Time	(0-120)s	0	If "ETS Solenoid Hold" set as 0, it is the time from end of idle delay to genset at rest; if not 0, it is from end of ETS solenoid delay to genset at rest.
19(14)	Switch Close Delay	(0.0-10.0)s	5.0	Mains' or generator's switch closing pulse width, when it is 0, output is continuous.
20(15)	Flywheel Teeth	(10.0-300.0)	118	Number of flywheel teeth, it can detect disconnection conditions and engine speed.
21(16)	Gen Abnormal Delay	(0-20.0)s	10.0	Over or under voltage alarm delay.
22(17)	Gen Over Voltage Shutdown	(30-60000)V	264	When genset voltage is over the point, generator over voltage is active. When the point is 60000V, generator over voltage is disabled.
23(18)	Gen Under Voltage Shutdown	(30-60000)V	196	When generator voltage is under the point, generator under voltage is active. When the point is 30V, generator under voltage is disabled.
24(19)	Under Speed Shutdown	(0-6000)r/min	1200	When the engine speed is under the point for 10s, shutdown alarm signal is sent.
25(20)	Over Speed Shutdown	(0-6000)r/min	1710	When the engine speed is over the point for 2s, shutdown alarm signal is sent.
26(21)	Gen Under Frequency Shutdown	(0-75.0)Hz	45.0	When generator frequency is lower than the point (not equal to 0) for 10s, shutdown alarm signal is sent.
27(22)	Gen Over Frequency Shutdown	(0-75.0)Hz	57.0	When generator's frequency is over the point and continues for 2s, generator over frequency is active.
28(23)	High Temperature Shutdown	(80-300)°C	98	When the temperature sensor value is over this point, it sends out high temp. alarm. When the value is 300, warning alarm won't be sent. (only suited for temperature sensor, except for high temp. pressure alarm signal inputted by programmable input port.)
29(24)	Low Oil Pressure Shutdown	(0-400)kPa	103	When the oil pressure sensor value is under this point, Low Oil Pressure alarm is sending out. When the value is 0, warning alarm won't be sent. (only suited for oil pressure sensor, except for low oil pressure alarm signal inputted by programmable input port.)

No.	Items	Range	Default	Description
30(25)	Low Fuel Level Warning Value	(0-100)%	10	When fuel level sensor value is under this point and remains for 10s, genset sends out warning alarm, only warn but not shutdown.
31(26)	Loss of Speed Signal Delay	(0-20.0)s	5.0	When the delay setting as 0s, it only warn but not shutdown.
32(27)	Charging Failure Volt. Difference	(0-30)V	6.0	During genset normal running, when B+ and charger D+ (WL) voltage difference is above this value for 5s, the controller issues “Charging Failure” warning.
33(28)	Battery Over Voltage	(12-40)V	33.0	When generator battery voltage is over the point and remains for 20s, battery over voltage signal is active. it only sends warn but not shutdown.
34(29)	Battery Under Voltage	(4-30)V	8.0	When generator battery voltage is under the point and remains for 20s, battery under voltage signal is active. it only sends warn but not shutdown.
35(30)	CT Ratio	(5-6000)/5	500	External current transformer ratio.
36(31)	Full Load Rating	(5-6000)A	500	Rated current of generator, used for calculating over load current.
37(32)	Over Current Percentage	(50-130)%	120	When load current is over the point, the over current delay is initiated.
38(33)	Over Current Delay	(0-3600)s	30	When load current is over the point, over current signal is sent. When the delay is 0, only warn but not shutdown.
39(34)	Fuel Pump On	(0-100)%	25	When the fuel level lower than the set value for 10s, it sends a signal to open fuel pump.
40(35)	Fuel Pump Off	(0-100)%	80	When the fuel level higher than the set value for 10s, it sends a signal to close fuel pump.
41(36)	Aux. Output 1	(0-29)	2	Factory default: Energized to stop. See table 8.
42(37)	Aux. Output 2	(0-29)	3	Factory default: Idle control. See table 8.
43(38)	Aux. Output 3	(0-29)	5	Factory default: Gens closed. See table 8.
44(39)	Aux. Output 4	(0-29)	6	Factory default: Mains closed. See table 8.
45(40)	Aux. Input 1	(0-32)	1	Factory default: High temperature alarm. See table 9.
46(41)	Active Type	(0-1)	0	Factory default: close.
47(42)	Delay	(0-20.0)s	2.0	
48(43)	Aux. Input 2	(0-32)	2	Factory default: Low oil pressure alarm. See table 9.
49(44)	Active Type	(0-1)	0	Factory default: close.
50(45)	Delay	(0-20.0)s	2.0	

No.	Items	Range	Default	Description
51(46)	Aux. Input 3	(0-32)	10	Factory default: Remote start input. See table 9.
52(47)	Active Type	(0-1)	0	Factory default: close.
53(48)	Delay	(0-20.0)s	2.0	
54(49)	Aux. Input 4	(0-32)	11	Factory default: Low fuel level warn. See table 9.
55(50)	Active Type	(0-1)	0	Factory default: close.
56(51)	Delay	(0-20.0)s	2.0	
57(52)	Aux. Input 5	(0-32)	12	Factory default: Low coolant level warn. See table 9.
58(53)	Active Type	(0-1)	0	Factory default: close.
59(54)	Delay	(0-20.0)s	2.0	
60(55)	Power On Mode	(0-2)	0	0: Stop Mode; 1: Manual Mode; 2: Auto Mode
61(56)	Module Address	(1-254)	1	The communication address of controller.
62(57)	Password	(0-9999)	0318	See **NOTE4**.
63(58)	Crank Disconnect Condition	(0-6)	2	Conditions of disconnecting starter (generator, magnetic pickup sensor, oil pressure), each condition can be used alone and simultaneously to separating the starter motor and genset as soon as possible.
64(59)	Engine Speed of Crank Disconnect	(0-3000)r/min	360	When engine speed is over this point, starter will disconnect.
65(60)	Frequency of Crank Disconnect	(0.0-30.0)Hz	14.0	When generator frequency is over this point, starter will disconnect.
66(61)	Oil Pressure of Crank Disconnect	(0-400)kPa	200	When engine oil pressure is over this point, starter will disconnect.
67(62)	High Temp. Stop Inhibit	(0-1)	0	Default: when temperature is overheat, the genset alarm and shutdown. **NOTE2**
68(63)	Low OP Stop Inhibit	(0-1)	0	Default: when oil pressure is too low, it sends alarm and shutdown. **NOTE3**
69(64)	AC System	(0-4)	0	0: 3P4W 1: 2P3W 2: 1P2W 3: 3P3W 4: 3P4W-ANC
70(65)	Temp. Sensor Curve Type	(0-14)	8	SGX. See table 10.
71(66)	Pressure Sensor Curve Type	(0-14)	8	SGX. See table 10.
72(67)	Fuel Level Sensor Curve Type	(0-7)	3	SGD. See table 10.
73(68)	Generator Poles	(2-64)	4	Number of magnetic poles, used for calculating rotating speed of generator without speed sensor.

No.	Items	Range	Default	Description
74(69)	Temp. Sensor Open Circuit Action	(0-2)	1	0: Not used; 1: Warning; 2: Shutdown
75(70)	Oil Pressure Sensor Open Circuit Action	(0-2)	1	
76(71)	Disconnect Oil Pressure Delay	(0-20.0)s	0.0	When disconnect conditions include oil pressure and engine oil pressure is higher than disconnect oil pressure delay, the genset is regarded as start successfully and starter will disconnect.
77(72)	Scheduled Run	(0-1)	0	0: Disabled; 1: Enabled.
78(73)	Scheduled Period	(0-1)	0	Circulate condition: monthly, weekly and daily can be selected. Start time and duration can be set.
79(74)	Auto Start Inhibited	(0-1)	0	0: Disabled; 1: Enabled.
80(75)	Scheduled Period	(0-2)	0	Circulate condition: monthly, weekly and daily can be selected. Don't start time and duration can be set.
81(76)	Overload Action	(0-2)	0	0 Not used; 1 Warn; 2 Shutdown When power is higher than preset value and duration exceeds than delay, over power warning is active. Return and delay value can be set.
82(77)	Start Interface	(0-1)	0	0: Disabled; 1: Enabled. Start interface delay can be set.
83(78)	Maintenance Password	(0-9999)	0	Enter password interface of maintenance configuration.
84(79)	Date/Time	Set the date/time of controller.		
85(80)	Fuel Output Time	(1-60)s	1	It is the time of the genset fuel output during power on.
86(81)	Manual Mode ATS	(0-1)	0	0: Key Switch; 1: Auto Switch.
87(82)	Speed Raise Pulse	(0-20.0)s	0.2	It is the speed-up pulse output time, when the unit enters the high-speed warm-up.
88(83)	Speed Drop Pulse	(0-20.0)s	0.2	It is the speed-drop pulse output time, when the unit enters the stop idling.
89(84)	Fuel Level Low Shutdown	(0-100)%	5	When fuel level of external level sensor falls below the setting limit and lasts for 5s, low fuel shutdown alarm will be initiated; if limit value set as 0, low fuel shutdown alarm will not be initiated.
90(85)	ATS Open Time	(1.0-60.0)s	3.0	
91(86)	Gen PT Ratio	(0-1)	0	0: Disabled; 1: Enabled. PT primary and PT secondary can be set.

No.	Items	Range	Default	Description
92(87)	Mains PT Ratio	(0-1)	0	0: Disabled; 1: Enabled. PT primary and PT secondary can be set. HGM6110N is reserved and without this setting.
93(88)	Active Power Loading Percentage	(0-1)	0	0: Disabled; 1: Enabled. When it is enabled, it is active power/rated power*100; when it is disabled, it 3-phase average current/rated current*100;
95(90)	RS485 Baud Rate	(0-4)	2	0: 2400bps; 1: 4800bps; 2: 9600bps; 3: 19200bps; 4: 115200bps.
96(91)	High Temp Warn	(0-300)°C (0-300)°C (0-3600)s	95 93 5	The set value, return value, and delay are configurable. Detection starts only after the safety on delay ends, and it is performed only for an external temperature sensor. When the set value is equal to 300, high temperature signal is not issued.
97(92)	Low Pressure Warn	(0-400)kPa (0-400)kPa (0-3600)s	124 138 5	The set value, return value, and delay are configurable. Detection starts only after the safety on delay ends, and it is performed only for an external temperature sensor.

NOTE1: The value in first line of "Number" column is for HGM6120N/NC, and the value in brackets is for HGM6110N/NC.

NOTE2: If select high temperature inhibit, or set programmable input as High Temperature Inhibit (this input is active), when temperature is higher than pre-setting threshold, controller sends warning signal only and not shutdown.

NOTE3: If select low oil pressure inhibit, or set programmable input as Low Oil Pressure Inhibit (this input is active), when low oil pressure is lower than pre-setting threshold, controller sends warning signal only and not shutdown.

NOTE4: If default password (0318) isn't changed, it doesn't need to input when configuring parameters via PC software; if the password is changed for the first time via PC software, it needs to input password in password window.

NOTE5: Between input correct password and LCD back light haven't got dark, input parameter numbers can enter parameter setting interface when enters "Password Input" again.

NOTE6: In teeth configuration interface, if being in teeth configuration status and frequency is larger than 20Hz, press start key for auto calculating teeth numbers and press confirm key for changing teeth numbers.

7.2 DEFINED CONTENTS OF PROGRAMMABLE OUTPUT 1-4

Table 8 – Defined Content of Programmable Output 1-4

No.	Items	Description
0	Not Used	Output is disabled when this item is selected.
1	Common Alarm	Including all shutdown alarm and warning alarm. When warning alarm occurs, the alarm won't self-lock; When a shutdown alarm occurs, the alarm will self-lock until alarm is reset.
2	Energize to Stop	Used for the genset with stop solenoid. Pick-up when idle speed is over while disconnect when ETS delay is over.
3	Idle Control	Used for the genset with idle speed. Pick-up when crank while disconnect when enter into warming up. Pick-up when stop idle while disconnect when genset stop completely.

No.	Items	Description
4	Preheat Control	Close before started and disconnect before powered on.
5	Close Gen Output	When close time is set as 0, it is continuous closing.
6	Close Mains Output	**HGM6110** without.
7	Open Breaker	When close time is set as 0, Open Breaker is disabled.
8	Speed Raise Relay	Pick-up when enter into warming up time. Disconnect when raise speed auxiliary input active.
9	Speed Drop Relay	Pick-up when enter into stop idle or ETS solenoid stop (shutdown alarm). Disconnect when drop speed auxiliary input active.
10	Run Output	Output when genset is in normal running, disconnect when rotating speed is lower than engine speed after fired.
11	Fuel Pump Control	Pick-up when the fuel level lower than the open threshold or low fuel level warning is active; disconnect when the fuel level over the close threshold and the low fuel level warning input is disabled.
12	High Speed Control	Output when it enters into warming up time, and disconnect after cooling.
13	Auto Mode	The controller is in Auto Mode.
14	Shutdown Alarm	Output when shutdown alarm occurs.
15	Audible Alarm	When shutdown alarm and warn alarm occur, audible alarm is set as 300s. In audible alarm output duration, when panel any key or “alarm mute” input is active, it can remove the alarm.
16	Heater Control	It is controlled by cooler of temperature sensor’s limited threshold.
17	Fuel Output	Action when genset is starting and disconnect when stop is completed.
18	Start Output	Genset output in start output status and open in other status.
19	In Manual Mode	Output when the system is in Manual mode.
20	Reserved	When selection this item, the output port will not activate.
21	Reserved	When selection this item, the output port will not activate.
22	Reserved	When selection this item, the output port will not activate.
23	Reserved	When selection this item, the output port will not activate.
24	Speed Raise Pulse	Raising speed time is output while the unit entering into high-speed warming up.
25	Speed Drop Pulse	Dropping speed time is output while the unit entering into stop idling.
26	Reserved	When selection this item, the output port will not activate.
27	Reserved	When selection this item, the output port will not activate.
28	Reserved	When selection this item, the output port will not activate.
29	Cooling Fan	Output when water temperature is higher than the open threshold of cooling fan, and disconnect when lower than the close threshold of cooling fan.

7.3 DEFINED CONTENTS OF PROGRAMMABLE INPUT 1-5

Table 9 – Defined Contents of Programmable Input 1-5 (All Ground (B-) Connected Active)

No.	Items	Description
0	Not Used	
1	High Temperature Shutdown	If the signal is active after safety run delay over, genset will immediately alarm to shutdown.
2	Low Oil Pressure Shutdown	
3	Warn Input	Only warning, not shutdown.
4	Shutdown Input	If the signal is active, genset will immediately alarm to shutdown.
5	WTH STOP by Cool	During engine running and the input is active, if high temperature occurs, controller will stop after high speed cooling; when the input is disabled, controller will stop immediately.
6	Generator Closed Auxiliary	Connect to auxiliary port of gen load breaker.
7	Mains Closed Auxiliary	Connect to auxiliary port of mains load breaker. HGM6110 doesn't support this function.
8	Inhibit WTH STOP	When it is active, high water temperature stop is inhibited. See **NOTE2 of Table 7** for more information.
9	Inhibit OPL STOP	When it is active, low oil pressure stop is inhibited. See **NOTE3 of Table 7** for more information.
10	Remote Start	In **Auto** mode, when input active, genset can start and take load after genset is OK; when input inactive, genset will stop automatically.
11	Fuel Level Low Warning	Connected to sensor digital input. The controller sends a warning alarm signal when active.
12	Coolant Level Low Warning	
13	Fuel Level Low Shutdown	Connected to sensor digital input. The controller sends a shutdown alarm signal when active.
14	Coolant Level Low Shutdown	
15	Inhibit Auto Start	In Auto Mode, when the input is active, no matter mains normal or not, genset won't start. If genset is in normal running, stop process won't be executed. When input is disabled, genset will automatically start or stop judging by mains normal or not.
16	Remote Control	When the input setting is in Remote Control, it can be set with Panel Lock. The input setting is in Remote Control, and Panel Lock is enabled, when the input is active, all buttons in panel are inactive except  and there is  in the right of fifth row in LCD homepage. The local controller can monitor the data only, and can't control the start or stop. The remote controller can monitor the data, and control the start or stop. When the input is inactive, the local controller can monitor the data, and control the start or stop. The remote controller can

No.	Items	Description
		monitor the data only, and can't control the start or stop. When the input setting isn't in Remote Control, both the remote controller and remote control can monitor the data, and can control the start or stop.
17	Charge Alt Fail IN	Connect to failed to charge output.
18	Panel Lock	All keys in panel are inactive except  and there is  in the right of fifth row in LCD when input is active.
19	Alarm Mute	Can prohibit "Audible Alarm" output when input is active.
20	Idle Control Mode	When input is active, under voltage, under frequency and under speed protections are disabled. During the Warming Up, Wait for Load, and Running stages, if the input is active, the genset returns to the idle speed stage and sends an open command.
21	Not Used	
22	Leakage Warning	If this signal is active, only a warning is initiated without shutdown.
23	Leakage Shutdown	If this signal is active, the generator set will immediately initiate an alarm and shut down.
24	Over Current Fault Shutdown	When input is active, controller will initiate shutdown alarms.
25	Over Speed Shutdown	When input is active, controller will initiate shutdown alarms.
26	Equal Power Input	When input is active, the over/under voltage alarm thresholds are divided by 2, and the overcurrent alarm threshold is multiplied by 2.
27	Sim. G-Load Btn	An external button (non-latching) can be connected to simulate a panel key. "Sim. G-Open Btn" is displayed on the HGM6110.
28	Sim. M-Load Btn	An external button (non-latching) can be connected to simulate a panel key. "Sim. G-Close Btn" is displayed on the HGM6110.
29	Sim. Manual Btn	An external button (non-latching) can be connected to simulate a panel key.
30	Sim. Auto Btn	An external button (non-latching) can be connected to simulate a panel key.
31	Sim. Stop Btn	An external button (non-latching) can be connected to simulate a panel key.
32	Sim. Start Btn	An external button (non-latching) can be connected to simulate a panel key.

7.4 SENSOR SELECTION

Table 10 – Sensor Selection

No.	Items	Content	Description
1	Temperature Sensor	0 Not used 1 User Configured (Resistance Type) 2 VDO 3 SGH 4 SGD 5 CURTIS 6 DATCON 7 VOLVO-EC 8 SGX 9 User Configured (4-20mA) 10 User Configured (0-5V) 11 Digital Closed 12 Digital Open 13 Reserved 14 Reserved	Defined input resistance range is 0Ω~6000Ω, factory default is SGX sensor.
2	Pressure Sensor	0 Not used 1 User Configured (Resistance Type) 2 VDO 3 SGH 4 SGD 5 CURTIS 6 DATCON 7 VOLVO-EC 8 SGX 9 User Configured (4-20mA) 10 User Configured (0-5V) 11 Digital Closed 12 Digital Open 13 VDO 5Bar 14 Reserved	Defined input resistance range is 0Ω~6000Ω, factory default is SGX sensor.
3	Fuel Level Sensor	0 Not used 1 User Configured (Resistance Type) 2 SGH 3 SGD 4 User Configured (4-20mA) 5 User Configured (0-5V) 6 Digital Closed 7 Digital Open	Defined input resistance range is 0Ω~6000Ω, factory default is SGD sensor.

NOTE: It needs special instructions for ordering when the genset uses 4-20mA or 0-5V sensors.

7.5 CONDITIONS OF CRANK DISCONNECT SELECTION

Table 11 – Crank Disconnect Conditions Selection

No.	Content
0	Speed
1	Frequency
2	Speed + Frequency
3	Speed + Oil pressure
4	Frequency + Oil pressure
5	Frequency + Speed + Oil pressure
6	Oil pressure

1) There are 3 kinds of crank disconnect conditions. Speed, Generator frequency and Oil pressure can be used alone. Oil pressure used with speed and generator frequency together is recommended, in order to make the starter and the engine disconnect as soon as possible.
2) Speed is the signal measured by magnetic sensor, which is installed in the engine for testing flywheel teeth.
3) When choosing speed, ensure the number of flywheel teeth is same as the pre-set, otherwise over or under speed shutdown may appear.
4) If generator has no magnetic pickup sensor, don't choose speed item; otherwise Fail to Start or Loss of Speed Signal shutdown will occur.
5) If the generator has no oil pressure sensor, don't choose corresponding item.
6) If generator frequency has not been selected, controller will not measure and display the relative parameters (can be applied to the pump set); if speed has not been selected, the speed will be calculated by the generating AC signal.

8 PARAMETER SETTING

After controller powered on, press  to enter into the parameters setting menu:

1) Parameters Setting
2) Information
3) Language
4) Event Log
5) Maintenance Setting

— **Parameters Setting**

"0318" can set all items in table 7 during inputting password. When default password has been changed, it needs to input the same password with controller for parameter setting via PC software.

If more parameter items need to be set or password is forgotten, such as voltage and current calibration, please contact the factory.

NOTES:

1) **HGM6110**, there are no items 1-5 in table 7; programmable output 1-4 have no digital outputs about mains.
2) Please modify the parameters in standby mode (crank conditions, auxiliary input and output configuration, multi delays, etc.) otherwise shutdown alarm or other abnormal conditions may appear.
3) The over-voltage threshold must be greater than the under-voltage threshold; otherwise over-voltage and under-voltage will occur at the same time.
4) The over-speed threshold must be greater than under-speed threshold, otherwise over speed and under speed will occur at the same time.
5) Set frequency value (after crank disconnect) as low as possible, in order to disconnect starter quickly.
6) Programmable input 1-5 cannot be set as the same items, otherwise it cannot realize correct function; programmable output 1-4 can be set as the same item.
7) If need to shut down after cooling, please set any input as "stop after cooling", then connect this input to ground; or set high temperature stop action as "cooling stop".

— **Information**

1) LCD will display some information of controller, such as software version, issue date.

NOTE: Pressing  will display the status of digital inputs and outputs.

2) Language

User may select display language as Chinese, English, Spanish, Russian, Portuguese, Turkey, Polish and French.

3) LCD contrast ratio adjustment

Press  and  (or  and ) and adjust LCD contrast ratio, which shall make the LCD characters clearer. Adjustment range is 0-9.

9 SENSOR SETTING

— When choosing sensor, standard value of sensor curve will be needed. If temperature sensor is set as SGH (120°C resistor type), sensor curve should be SGH (120°C resistor type); If it is set as SGD (120°C resistor type), sensor curve should be SGD curve.
— If there is difference between standard sensor curve and chosen sensor curve, select “defined sensor”, and then input defined sensor curve.
— When sensor curve is inputted, X value (resistance) must be in accordance with the order of higher to lower, otherwise errors will occur.
— When sensor is selected as “Not used”, temperature, pressure and fuel level will be display as “- - -“ in LCD.
— If there is no pressure sensor, but only has low pressure alarm switch, then you must set pressure sensor as “Not used”, otherwise oil pressure low alarm shutdown may appear.
— Can set several points of forehand or backmost as the same ordinate, as the following picture:

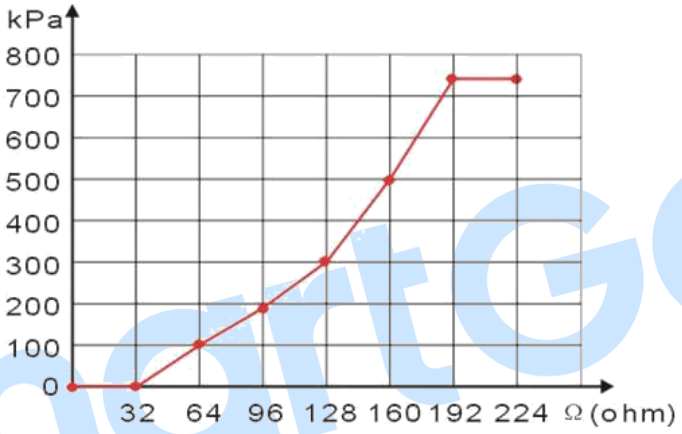

Fig.4 – Sensor Curve Diagram

Table 12 – Conventional Pressure Unit Conversion Table

	1N/m^2 (pa)	1kgf/cm^2	1bar	(1b/in^2) psi
1Pa	1	1.02x10^{-5}	1x10^{-5}	1.45x10^{-4}
1kgf/cm^2	9.8x10^4	1	0.98	14.2
1bar	1x10^5	1.02	1	14.5
1psi	6.89x10^3	7.03x10^{-2}	6.89x10^{-2}	1

10 COMMISSIONING

Before operation, the following checking should be carried out:

— Check and ensure all the connections are correct and wires diameter is suitable.

— Ensure that the controller DC power has fuse; battery positive and negative have correctly connected.

— Emergency stop input must be connected to positive of starting battery via normally close contact of emergency stop.

— Take proper actions to prevent engine to disconnect crank (e. g. Remove the connections of fuel value). If checking is OK, connect start battery, select Manual Mode, controller will execute the program.

— Set controller as Manual Mode, press “start” key to start genset. If failed within the setting crank times, controller will send “Failed to Start” signal; then press “stop” to reset controller.

— Recover actions of preventing engine to disconnect crank (e. g. Connect wire of fuel value), press “start” key again, genset will start. If everything goes well, genset will normally run after idle running (if configured). During this period, watch for engine’s running situations and voltage and frequency of alternator. If there is abnormal, stop genset and check all connections according to this manual.

— Select the Auto Mode from front panel, connect to mains signal. After the mains normal delay, controller will transfer ATS (if configured) into mains load. After cooling, controller will stop genset and into standby state until mains abnormal again.

— When mains abnormal again, genset will start automatically and into normal running, send signal to make gens close, transfer ATS and make genset take load. If it not likes this, please check connections of ATS according to this manual.

— If there are any other questions, please contact SmartGen’s service.

SmartGen

11 TYPICAL APPLICATION

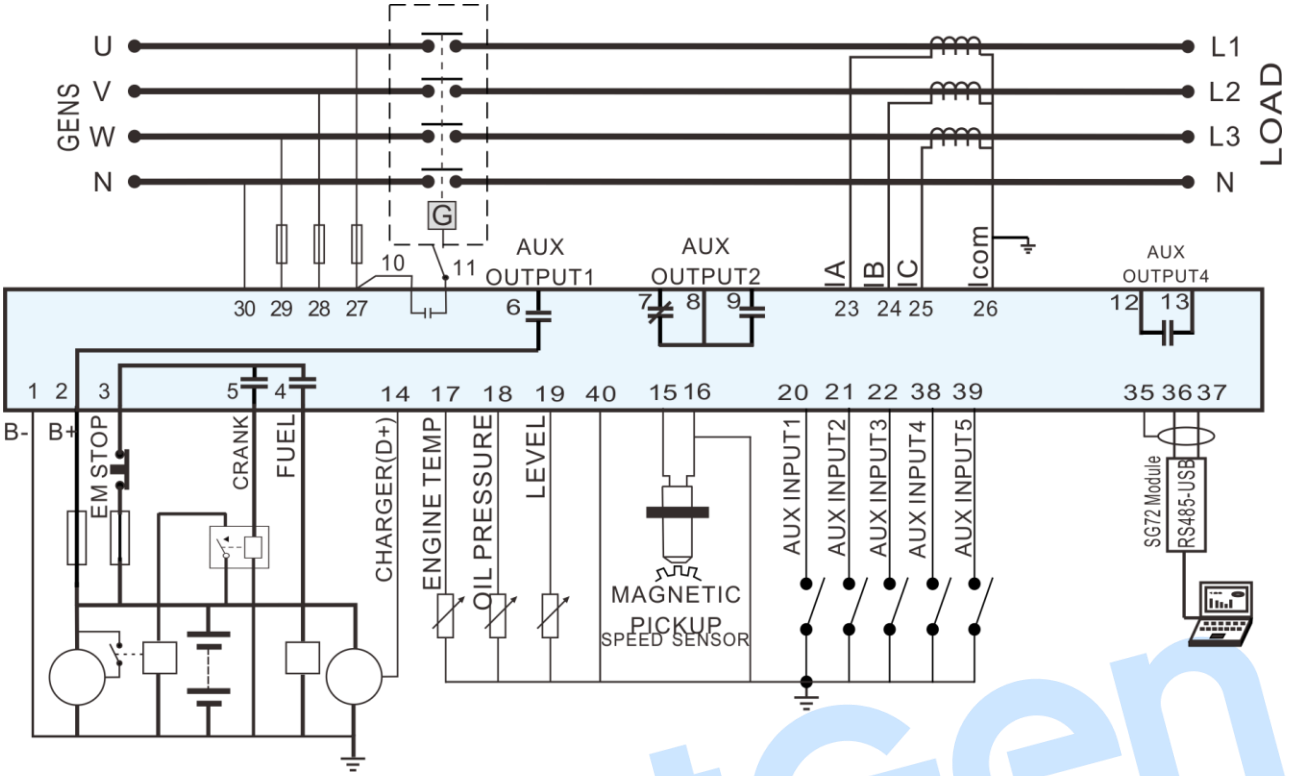

Fig.5 – HGM6110NC Typical Application Diagram

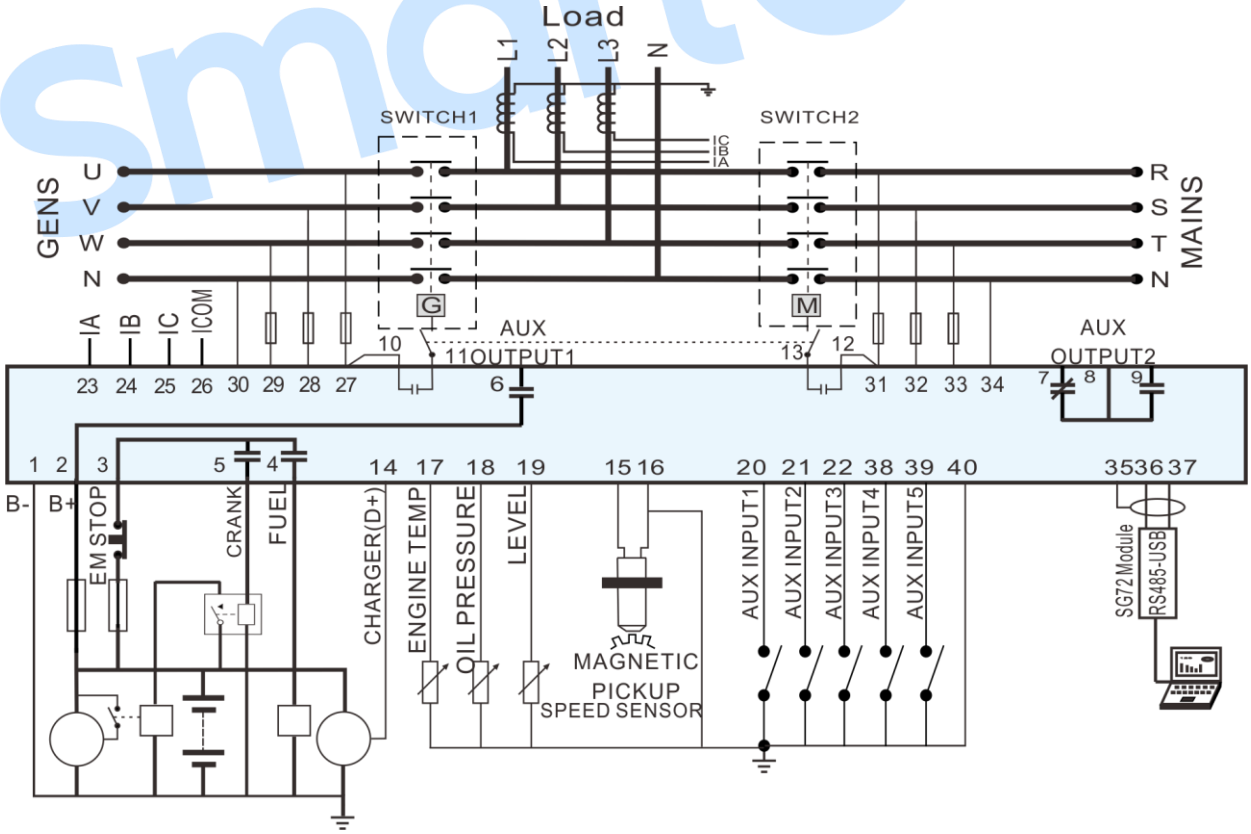

Fig.6 – HGM6120NC Typical Application Diagram

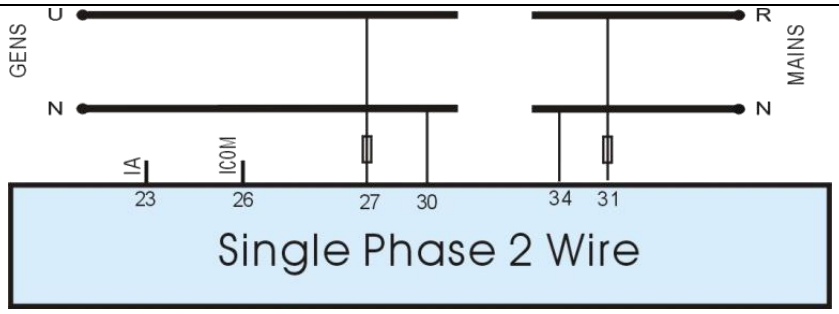

Fig. 7 – Single Phase 2 Wire

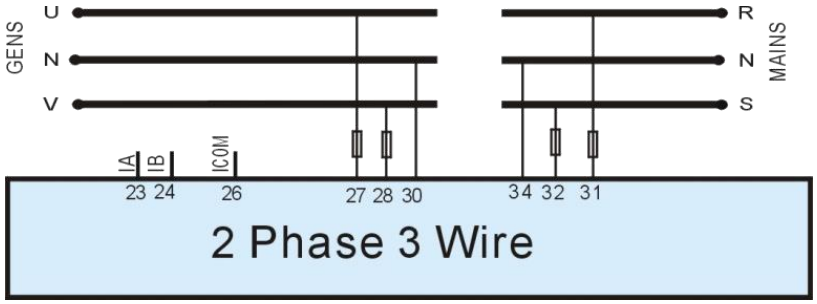

Fig. 8 – 2 Phase 3 Wire

NOTE: Recommend that the output of crank and Fuel expand high capacity relay.

SmartGen

12 INSTALLATION

12.1 FIXING CLIPS

The module is held into the panel fascia using the supplied fixing clips.

— Withdraw the fixing clip screw (turn anticlockwise) until it reaches proper position.
— Pull the fixing clip backwards (towards the back of the module) ensuring four clips are inside their allotted slots.
— Turn the fixing clip screws clockwise until they make contact with the panel.
— Care should be taken not to over tighten the screws of fixing clips.

12.2 OVERALL DIMENSION AND PANEL CUTOUT

Unit: mm

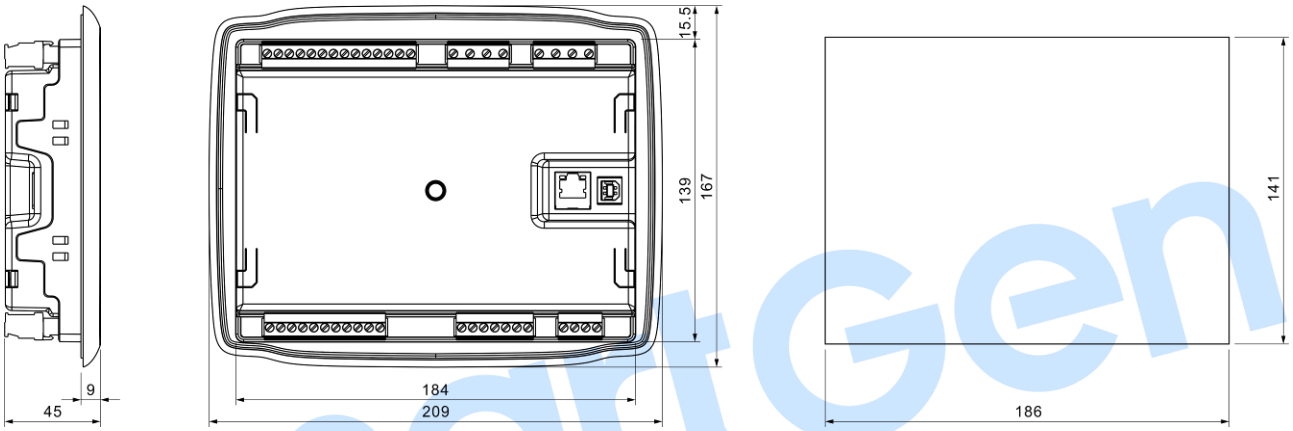

Fig.9 – Case and Overall Dimensions

HGM6100N series controller can be applicable to (8~35) VDC battery voltage. Battery negative must be reliably connected to engine shell. The connection between controller power and battery should not be less than 2.5mm^2. If a float charger is fitted, please connect output line of the charger with battery directly, and then connect battery positive and negative to power input of controller separately, in case that charger will interfere with the normal running of controller.

1) Speed Sensor Input

Speed sensor is installed in the engine for testing flywheel teeth. The connection with controller uses 2-core screen, shield layer should be connected to terminal 16 of controller and the other end vacant. The other two signal lines are respectively connected to terminal 15 and terminal 16. At full speed, output voltage range is (1~24) VAC (RMS), 12VAC is recommended (rated speed). During installing, make the speed sensor contact the flywheel firstly, then pour out 1/3 laps, finally lock nut on the sensor.

2) Output and Expansion Relay

All the outputs of controller are relay outputs. If need to expand relay, please add freewheeling diode in both ends of relay coil (when expansion relay coil links DC), or add RC loop (when expansion relay coil links AC), in case controller or other equipments are interfered.

3) AC Input

HGM6100N series controller must externally connect to current transformer; CT secondary current must be 5A. Besides, the phase of CT and input voltage must be correct, or the sampling current and active power may be incorrect.

NOTES: A. Icom must connect to battery cathode of the controller.

B. When there is load current, open circuit is inhibited in the CT secondary side.

4) Withstand Voltage Test

When the controller has been installed in the control panel, during the test please disconnect all the terminals, in case high voltage damages the controller.

13 FAULT FINDING

Table 13 – Fault Finding

Symptoms	Possible Solutions
Controller Inoperative	Check starting battery; Check connections of controller; Check the DC fuse.
Genset Stops	Check if water/cylinder temperature too high; Check alternator voltage; Check the DC fuse.
Emergency Stop	Check if an emergency stop button is fitted; Ensure battery positive is connected to the emergency stop input; Check if connection is open circuit.
Low Oil Pressure Alarm (After Crank Disconnect)	Check oil pressure sensor and connections.
High Temp. Alarm (After Crank Disconnect)	Check temperature sensor and connections.
Shutdown Alarm During Running	Check switch and connections according to information on LCD; Check configurable inputs.
Crank Disconnect Failed	Check connections of fuel solenoid; Check starting battery; Check speed sensor and its connections; Refer to engine manual.
Starter Inoperative	Check connections of starter; Check starting battery.
Genset Running While ATS Not Transfer	Check ATS; Check connections between ATS and controller.
RS485 Communication Failure	Check connections; Check if COM port is correct; Check if A and B of RS485 is connected reversely; Check if PC COM port is damaged; 120Ω resistance between RS485's A and B is recommended.