WAGNER

Translation of the Original Operating Manual

For professional use.
Always follow the information in this manual, particularly the safety instructions and the warning instructions. Store the manual in a safe place.

Version 05/2017

SPRINT XE

Manual Powder System

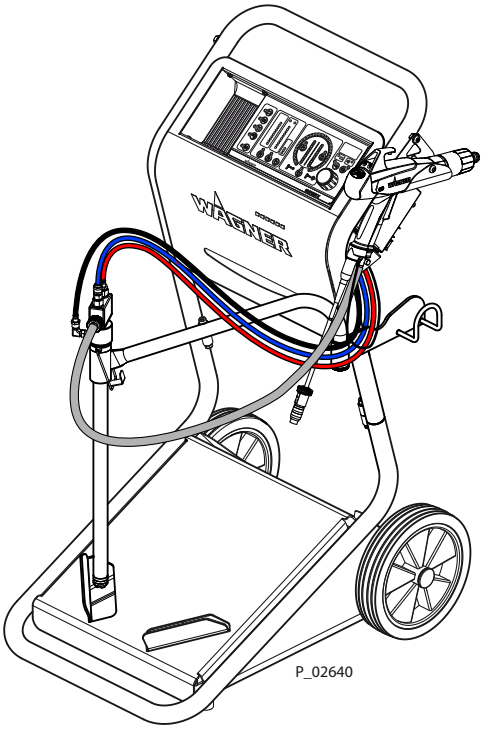

P_02640

CE

Table of Contents

1	**ABOUT THESE INSTRUCTIONS**	**6**
1.1	Preface	6
1.2	Warnings, Notices and Symbols in these Instructions	6
1.3	Languages	7
1.4	Abbreviations	7
1.5	Terminology for the Purpose of this Manual	7
2	**CORRECT USE**	**8**
2.1	Device Type	8
2.2	Type of Use	8
2.3	For Use in Potentially Explosive Areas	8
2.4	Processible Working Materials	8
2.5	Misuse	8
3	**IDENTIFICATION**	**9**
3.1	Explosion Protection Identification	9
3.1.1	Trolley Identification	9
3.1.2	Control Unit Identification	9
3.1.3	Spray Gun Identification	10
3.2	Type Plates	10
3.2.1	Trolley Type Plate	10
3.2.2	Control Unit Type Plate	11
3.2.3	Powder Spray Gun Type Plate	11
3.3	Permissible Device Combinations	12
4	**BASIC SAFETY INSTRUCTIONS**	**13**
4.1	Safety Instructions for the Operator	13
4.1.1	Electrical Devices and Equipment	13
4.1.2	A Safe Work Environment	14
4.1.3	Personnel Qualifications	14
4.2	Safety Instructions for Staff	15
4.2.1	Use Personal Safety Equipment	15
4.2.2	Safe Handling of WAGNER Powder Spray Devices	15
4.2.3	Ground the Unit	16
4.2.4	Product Hoses	16
4.2.5	Cleaning and Flushing	17
4.2.6	Maintenance and Repair	17
4.2.7	Protective and Monitoring Equipment	18
5	**DESCRIPTION**	**19**
5.1	Construction and Mode of Operation	19
5.1.1	Description of Sprint Airfluid XE	19
5.1.2	Description of Sprint 60 L XE tank (Without Vibrator Table)	20
5.1.3	Operating Modes	21
5.2	Included Items	21
5.2.1	Variants	21
5.2.2	Standard Equipment	21
5.2.3	Technical Data	22
5.3	Operation of the Control Unit	24

6	**COMMISSIONING**	**29**
6.1	Training of Assembly/Commissioning Staff	29
6.2	Storage Conditions	29
6.3	Installation Conditions	29
6.4	Assembling the Manual System	30
6.4.1	Assembling the Equipment Trolley	30
6.4.2	Assembling the Control Unit	30
6.5	Connecting the Manual Powder System	31
6.5.1	Connection Requirements	31
6.5.2	Connecting the Airfluid Manual Powder System	32
6.5.3	Connecting the 60 L Tank Manual System	34
6.6	Grounding	36
6.6.1	Grounding the Powder Coating System	36
6.7	Safety Checks	37
7	**OPERATION**	**38**
7.1	Training the Operating Staff	38
7.2	Work	38
7.2.1	Switching on the Manual System	39
7.2.2	Adjusting the Fluidization (Airfluid)	40
7.2.3	Adjusting Fluidization (60 L Tank Without Vibrator Table)	41
7.3	Factory Setting Recipe Nos. 1–4	42
7.4	Interrupting the Coating Process	43
7.4.1	Airfluid Version	43
7.4.2	60 L Tank Version	44
7.5	Performing a Paint Change	45
7.5.1	Airfluid Version	45
7.5.2	60 L Tank Version	46
7.6	"Double Click" Recipe (High Dynamic Remote)	49
8	**CLEANING AND MAINTENANCE**	**50**
8.1	Cleaning	50
8.1.1	Cleaning Staff	50
8.1.2	Flushing and Cleaning the System	50
8.2	Maintenance	50
8.2.1	Maintenance Staff	50
8.2.2	Maintenance Instructions	50
8.2.3	Safety Checks	51
8.2.4	Maintenance Procedures	51
8.3	Periodic Checking of the Manual System	52
8.3.1	Airfluid Version	52
8.3.2	60 L Tank Version	53
9	**TROUBLESHOOTING AND RECTIFICATION**	**54**
10	**INSPECTIONS**	**56**
11	**DISASSEMBLY AND DISPOSAL**	**57**
11.1	Disassembly	57
11.2	Disposal	57
12	**ACCESSORIES**	**58**
12.1	Feed System SN-2 550/10	58
12.2	Maintenance Unit	58
12.3	Quick Coupling Set	59

12.4	Adapter Plate Switchbox	59
12.5	Spray Gun Switchbox	59
12.5.1	Installation of the Switchbox	60
12.5.2	Switching the Gun Types	61
12.6	PEM-T3 Manual Gun	62
12.7	PEM-T3 Extension	62
12.8	Retrofit Set, Tribo Lance TL1	63
12.9	Swivel Casters Set	63
12.10	Powder Hose	64
12.11	Sprint Dual Manual Coating Set	64
12.12	Wall Mount	64
12.13	Conversion Sets	65
12.14	Recipe Label	66
12.15	Extended Operating Manual	66
13	**SPARE PARTS**	**67**
13.1	How to Order Spare Parts?	67
13.2	Spare Parts List of Sprint Airfluid XE Manual Powder System	68
13.3	Spare Parts List of Sprint 60 L XE Manual Powder System Tank	70
13.4	Trolley Spare Parts	71
13.5	Intake Tube, ST 550/10	72
13.6	Feed System, SN-2 550/10	73
13.7	Compressed Air Supply	74
13.8	Powder Injector, PI-F1	75
13.9	HiCoat-ED Pump F	76
13.10	60 L/25 L Tank	77
14	**WEARING PARTS**	**79**
15	Guarantee and Conformity Declarations	**80**
15.1	Important Notes on Product Liability	80
15.2	Warranty Claim	80
15.3	EU Declaration of Conformity	81
15.3.1	EU Declaration of Conformity for Trolley	81
15.3.2	EU Declaration of Conformity for Control Unit	82
15.3.3	EU Declaration of Conformity for Spray Guns	83
15.4	EC Type Examination Certificate	84
15.5	FM Approval	86

1 ABOUT THESE INSTRUCTIONS

1.1 PREFACE

The operating manual contains information about safely operating, maintaining, cleaning and repairing the device.
The operating manual is part of the device and must be available to the operating and service personnel.
Operating and service personnel should be instructed according to the safety instructions.
The device may only be operated in compliance with this operating manual.
This equipment can be dangerous if it is not operated according to the instructions in this operating manual.
Electrostatic manual coating systems may only be operated by qualified personnel.

1.2 WARNINGS, NOTICES AND SYMBOLS IN THESE INSTRUCTIONS

Warning instructions in this operating manual highlight particular dangers to users and to the device and state measures for avoiding the hazard. These warning instructions fall into the following categories:

⚠ **DANGER**	Immediate risk of danger. Non-observance will result in death or serious injury.
⚠ **WARNING**	Potential risk. Non-observance may result in death or serious injury.
⚠ **CAUTION**	Potentially hazardous situation. Non-observance may result in minor injury.
ⓘ **NOTICE**	Potentially hazardous situation. Non-observance may result in damage to property.
Note	Provides information about particular characteristics and how to proceed.

Explanation of warning:

⚠ **LEVEL OF DANGER**

This notice warns you of a hazard!
Possible consequences of not observing the warning instructions.
→ The measures for preventing the hazard and its consequences.



1.3 LANGUAGES

The operating manual is available in the following languages:

Language	Order No.
German	2354919
English	2354920
French	2354921
Italian	2354922
Spanish	2354923
Russian	2354924
Dutch	2388048

Language	Order No.
Chinese	2354925
Portuguese	2368373
Japanese	2367167
Danish	2374101
Swedish	2374100
Czech	2382850

Additional languages on request or at: www.wagner-group.com

1.4 ABBREVIATIONS

Order No.	Order number
ET	Spare part
K	Marking in the spare parts lists
Pos	Position
Stk	Number of pieces

1.5 TERMINOLOGY FOR THE PURPOSE OF THIS MANUAL

Cleaning	
Cleaning	Manual cleaning of devices and device parts with cleaning agent
Flushing	Internal flushing with compressed air of parts carrying paint
Staff qualifications	
Trained person	Is instructed in the tasks assigned to him/her, the potential risks associated with improper behavior as well as the necessary protective devices and measures.
Electrically trained person	Is instructed by an electrician about the tasks assigned to him/her, the potential risks associated with improper behavior as well as the necessary protective devices and measures.
Electrician	Can assess the work assigned to him/her and detect possible hazards based on his/her technical training, knowledge and experience in relevant provisions.
Skilled person in accordance with TRBS 1203 (2010/Revision 2012)	A person, who, based on his/her technical training, experience and recent vocational experience, has sufficient technical knowledge in the areas of explosion protection, protection from pressure hazards and electric hazards (if applicable) and is familiar with the relevant and generally accepted rules of technology so that he/she can inspect and assess the status of devices and coating systems based on workplace safety.

2 CORRECT USE

2.1 DEVICE TYPE

Manual powder system for manual coating of grounded work pieces.

2.2 TYPE OF USE

The Sprint XE manual system is designed for single and serial coatings for industry and trade.

WAGNER explicitly prohibits any other use!

Electrostatic manual coating systems may only be used in spray areas equipped in accordance with EN 12981 or under equivalent ventilation conditions.
The components of the three different versions of the Sprint XE manual system (Airfluid version, 60 L tank version) are mutually compatible.

The device may only be operated under the following conditions:

→ Use the device only to work with the products recommended by WAGNER.
→ Only operate the device as a whole.
→ Do not deactivate safety fixtures.
→ Use only WAGNER original spare parts and accessories.
→ The operating personnel must be trained on the basis of this operating manual.

→ Follow the instructions in the operating manual.

2.3 FOR USE IN POTENTIALLY EXPLOSIVE AREAS

The device is suitable for use in potentially explosive areas as defined in Directive 2014/34/EU (ATEX), (see Explosion protection marking Chapter 3.1).
In explosion hazard areas, only use approved explosion-proof electrical devices.



2.4 PROCESSIBLE WORKING MATERIALS

– types of powder that can be charged electrostatically;
– metallic powder.

Note:
Contact your local WAGNER dealer and the lacquer manufacturer if you encounter application problems.

2.5 MISUSE

Misuse can lead to physical injury and/or property damage!
Special attention must be paid that:

→ Do not process liquid coating products, e.g. solvents or water-based lacquers;
→ Do not process food, medicine or cosmetics.

3 IDENTIFICATION

3.1 EXPLOSION PROTECTION IDENTIFICATION

3.1.1 TROLLEY IDENTIFICATION

Device type:	Airfluid XE trolley/60 L XE trolley
Manufacturer:	Wagner International AG 9450 Altstätten Switzerland

CE Ex II 3D Dc T100 °C

CE	European Communities
Ex	Symbol for explosion protection
II	Device class II
3	Category 3
D	Ex-atmosphere dust
Dc	Device protection level, suitable for use in Zone 22
T100 °C	Maximum surface temperature

3.1.2 CONTROL UNIT IDENTIFICATION

The device is suited for use in potentially explosive areas, in accordance with Test Certificate PTB 12 ATEX 5001.

Device type:	EPG-Sprint XE control unit
Manufacturer:	Wagner International AG 9450 Altstätten Switzerland

CE 0102 Ex II 3(2)D

CE	European Communities
0102	Number of notified body which issues the recognition of quality assurance in production
Ex	Symbol for explosion protection
II	Device class II
3	Category 3 (Zone 22)
(2)	Impact on equipment of category 2
D	Ex-atmosphere dust

3.1.3 SPRAY GUN IDENTIFICATION

The device is suited for use in potentially explosive areas, in accordance with Test Certificate PTB 12 ATEX 5001.

Device type:	PEM-X1 manual gun
Manufacturer:	Wagner International AG 9450 Altstätten Switzerland

CE 0102 Ex II 2D 2mJ

CE	European Communities
0102	Number of notified body which issues the recognition of quality assurance in production
Ex	Symbol for explosion protection
II	Device class II
2	Category 2
D	Ex-atmosphere dust
2mJ	Maximum ignition energy 2 mJ

The EC-type examination certificates are listed in Chapter 15.4.

3.2 TYPE PLATES

3.2.1 TROLLEY TYPE PLATE

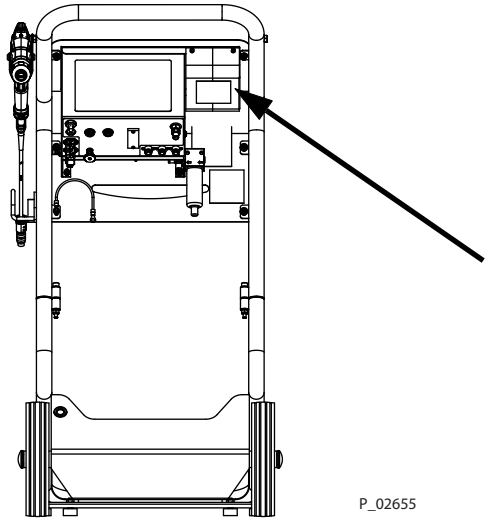

P_02655

WAGNER Made in Switzerland
Wagner International AG
CH-9450 Altstätten
II 3D Dc T100°C

Typ: Manual Unit SPRINT
Type: Handanlage SPRINT

☐ SPRINT Airfluid XE 2355400	230 VAC 50 Hz
☐ SPRINT Airfluid XE Jap. 2355800	100 VAC 50/60 Hz
☐ SPRINT 60L XE 2355403	90-250 VAC 47-63 Hz
☐ SPRINT Airfluid XE USA 2355402	115 VAC 60 Hz
☐ SPRINT 60L XE USA 2355404	90-250 VAC 47-63 Hz

FM APPROVED
CL II, Div 2
Group F & G
Ambient
Temperature 40C T4

In accordance with control document: 2309729

Serial no. Serie Nr.:

Year of manufacture:
Baujahr:

3.2.2 CONTROL UNIT TYPE PLATE

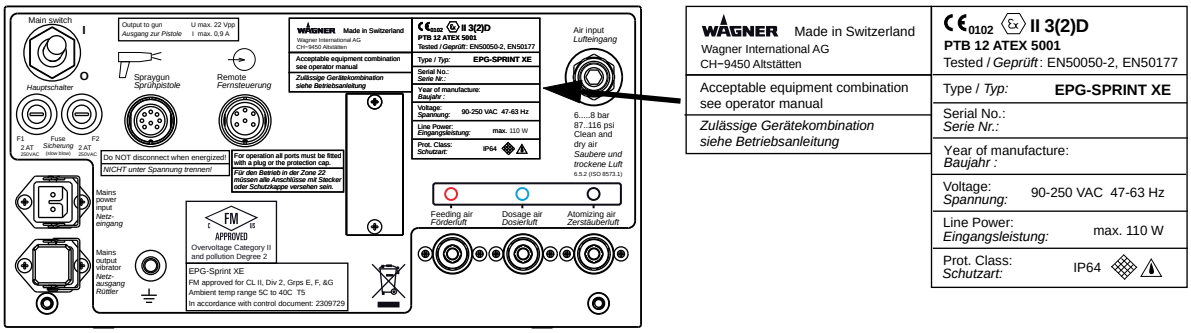

P_02656

3.2.3 POWDER SPRAY GUN TYPE PLATE

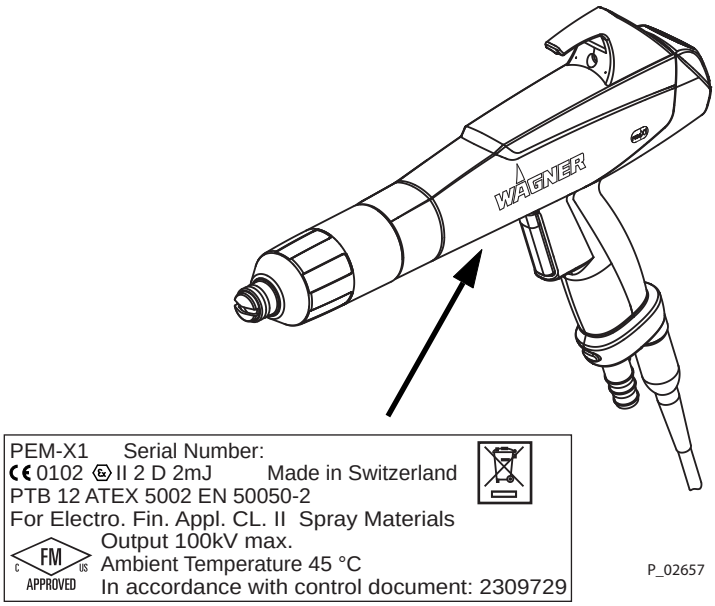

P_02657

3.3 PERMISSIBLE DEVICE COMBINATIONS

⚠ WARNING

Incorrect use!

Risk of injury and damage to the device.

→ Only use the manual system with the original WAGNER control units and powder spray guns.



Only use the Sprint XE manual system with the following guns and control units:

Control units	Guns
– EPG-Sprint XE	– PEM-X1 Corona spray gun, PEM-X1 CG
	– PEM-C4 Corona spray gun
	– PEM-C4-Ergo Corona spray gun
	– PEM-C4-Ergo Corona spray gun FM USA
	– PEM-T3 Tribo spray gun
	– Tribo lance TL 1

Permissible device combinations for the USA and Canada, see Chapter 15.5 "FM Approval".

4 BASIC SAFETY INSTRUCTIONS

4.1 SAFETY INSTRUCTIONS FOR THE OPERATOR



→ Keep this operating manual at hand near the device at all times.
→ Always follow local regulations concerning occupational safety and accident prevention.

4.1.1 ELECTRICAL DEVICES AND EQUIPMENT



Electric shock hazard!
Danger to life from electric shock.

→ Prepare device in accordance with the local safety requirements with regard to the operating mode and ambient influences.
→ May only be maintained by skilled electricians or under their supervision. With open housings, there is a danger from line voltage.
→ Operate device in accordance with the safety regulations and electrotechnical regulations.
→ Must be repaired immediately in the event of problems.
→ Decommission if it poses a hazard or is damaged.
→ Must be de-energized before work is commenced. Secure the device against being switched back on without authorization. Inform staff about planned work. Observe electrical safety regulations.
→ Ground all devices to a common grounding point.
→ Only operate the device with a properly installed socket with a protective ground wire connection.
→ Keep liquids away from electrical devices.

4.1.2 A SAFE WORK ENVIRONMENT



Danger due to dust formation!
Severe or fatal injuries due to explosion hazard or inhalation, swallowing or contact with the skin or eyes.

- → The floor in the working area must be electrostatically conductive (measurements according to EN 1081 and EN 61340-4-1).
- → Paint mist extraction systems/ventilation systems must be fitted on site according to local regulations.
- → Make sure that the ground connection and potential equalization of all system parts are reliable and continuous and can withstand the expected stress (e.g. mechanical stress, corrosion).



- → Ensure that personal protective equipment (see Chapter 4.2.1) is available and is used.
- → Ensure that all persons within the working area wear static dissipative shoes. Footwear must comply with EN 20344. The measured insulation resistance must not exceed 100 MΩ.
- → Protective clothing, including gloves, must comply with EN 1149-5. The measured insulation resistance must not exceed 100 MΩ.
- → Ensure that there are no ignition sources such as naked flames, sparks, glowing wires, or hot surfaces in the vicinity. No smoking.
- → Maintain sufficient quantities of suitable fire extinguishers and ensure that they are serviceable.
- → The powder release must be electronically interlocked with the powder spray system exhaust equipment.
- → Excess coating product (overspray) must be collected up safely.
- → The operating company must ensure that an average concentration of powder lacquer in the air does not exceed 50% of the lower explosion limit (LEL = max. permitted concentration of powder to air). If no reliable LEL value is available, the average concentration must not exceed 10 g/m^3.
- → In the event of defects, immediately bring the device or system to a stop and arrange to have repairs carried out immediately.

4.1.3 PERSONNEL QUALIFICATIONS

Hazard due to incorrect use of device!
Risk of death due to untrained personnel.

- → Ensure that the operating personnel has been instructed by the operator in accordance with the operating manual and the operating instructions. The device must only be operated, maintained and repaired by trained personnel. Refer to the operating instructions for information about the required personnel qualifications.

4.2 SAFETY INSTRUCTIONS FOR STAFF



→ Always follow the information in this manual, particularly the safety instructions and the warning instructions.
→ Always follow local regulations concerning occupational safety and accident prevention.

→ Under no circumstances should people with pacemakers be in the area where the high-voltage field between the spray gun and the work piece to be coated builds up!

4.2.1 USE PERSONAL SAFETY EQUIPMENT



Danger due to dust formation!
Serious or fatal injuries due to inhalation, swallowing or contact with the skin or eyes.
→ Observe the processing regulations laid down by the manufacturer of the powder lacquer being used, when preparing or processing the powder.
→ Take note of the manufacturer's notification and the relevant environmental protection regulations when disposing of powder lacquers.
→ Take the specified protective measures. In particular wear safety goggles, protective clothing and gloves, as well as hand protection cream if necessary.
→ Use a mask or breathing apparatus if necessary.
→ For sufficient health and environmental safety: Operate the device in a powder coating booth or on a spraying wall with the ventilation (extraction) switched on.

4.2.2 SAFE HANDLING OF WAGNER POWDER SPRAY DEVICES



Danger due to dust formation!
→ Do not point spray guns at people.
→ Do not spray device parts using electrostatic equipment.
→ Before any work on the device, in the event of work interruptions and malfunctions:
  – Switch off the energy/compressed air supply.
  – Relieve pressure on powder spray gun and device.
  – Secure the powder spray gun against actuation.
  – Disconnect the control unit from the mains.
  – In the event of functional faults: remedy the fault as described in the "Troubleshooting" chapter.
→ Carry out the work steps as described in the "Pressure relief" chapter:
  – if pressure relief is required,
  – if the coating work is interrupted or stopped,
  – before the device is cleaned on the outside, checked, or serviced,
  – before the spray nozzle is installed or cleaned.

4.2.3 GROUND THE UNIT



Hazard due to electrostatic charge!

Explosion hazard and damage to the device.

The electrostatic charge may, in certain cases, give rise to electrostatic charges on the device. Flames or sparks can form during discharge.

Correct grounding of the entire coating system prevents electrostatic charges:



- → Ensure that all devices and tanks are grounded before each coating process.
- → All of the system's conductive elements, such as floors, walls, ceilings, protective grating, transport equipment, work pieces, powder tanks, automatic moving devices or construction parts etc. in the spray area, with the exception of parts which carry high voltage during operation, must be connected to the grounding system.
  Parts of the booth must be grounded in accordance with EN 12981.
- → Ensure that all persons inside the working area are grounded, e.g., that they are wearing static dissipative shoes.
- → Grounding cables must be checked regularly to ensure that they are serviceable (see EN 60204).

4.2.4 PRODUCT HOSES



Danger due to damaged product hoses!

The product hose may cause dangerous injuries.

- → Use only an original WAGNER powder hose.
- → Make sure that the hoses are laid only in suitable places. Hoses should not be laid in the following places under any circumstances:
  – in high traffic areas,
  – on sharp edges,
  – on moving parts or
  – on hot surfaces.
- → Ensure that the hoses are never run over by vehicles (e.g., fork lifts), or that the hoses are never put under pressure from the outside in any other way.
- → Ensure that the hoses are never kinked. Observe maximum bending radii.
- → Ensure that no work is ever performed with a damaged hose.
- → Make sure that the hoses are never used to pull or move the equipment.

4.2.5 CLEANING AND FLUSHING



Hazard due to cleaning and flushing

Explosion hazard and damage to the device.

- → Before starting cleaning or any other manual work, the high voltage in the spray area must be shut down and locked to prevent it from being switched back on.
- → Lock the compressed air supply and decompress the device.
- → Secure the device against being switched back on without authorization.
- → Use only electrically conducting and grounded tanks for cleaning fluids.
- → Preference should be given to non-flammable cleaning fluids.
- → If flammable cleaning fluids are used, all parts carrying high voltage must be discharged to a discharge energy of less than 0.24 mJ, once the high voltage has been switched off, before they can be reached.
- → Most flammable solvents have an ignition energy of around 0.24 mJ or 60 nC.
- → The cleaning agent's flash point must be at least 15 K above the ambient temperature.
- → Only mobile industrial vacuum cleaners of design 1 (see EN 60335-2) may be used for getting rid of dust build-ups.
- → Take measures for workplace safety (see chapter 4.1.2).



4.2.6 MAINTENANCE AND REPAIR

Hazard due to improper maintenance and repair!

Danger to life and equipment damage.

- → Only a WAGNER service center or a suitably trained person may carry out repairs and replace parts.
- → Repair or replacement of devices or parts of devices are only allowed to be performed outside the hazard area by qualified personnel.
- → Do not change or modify the device; if change is necessary, contact WAGNER.
- → Only repair and replace parts that are listed in the 12 "Spare parts" chapter and 13 that are assigned to the unit.
- → Do not use any defective components.
- → Exclusively use accessories listed in Chapter 12 and that are assigned to the unit.
- → Before all work on the device and in the event of work interruptions:
  - Switch off the energy and compressed air supply.
  - Relieve pressure on powder spray gun and device.
  - Secure the powder spray gun against actuation.
- → Observe the operating and service manual for all work.

4.2.7 PROTECTIVE AND MONITORING EQUIPMENT

Hazard due to removal of protective and monitoring equipment!
Danger to life and equipment damage.

- → Protective and monitoring equipment must not be removed, modified or rendered unusable.
- → Regularly check for perfect functioning.
- → If defects are detected on protective and monitoring equipment, the system must not be operated until these defects are remedied.

5 DESCRIPTION

5.1 CONSTRUCTION AND MODE OF OPERATION

5.1.1 DESCRIPTION OF SPRINT AIRFLUID XE

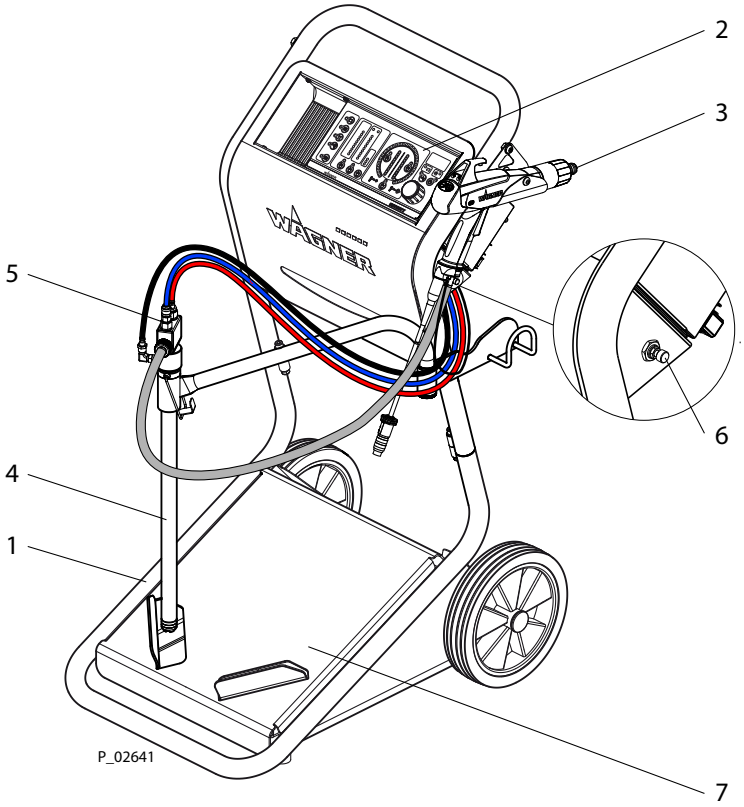

Pos	Designation
1	Equipment trolley
2	EPG-Sprint XE control unit
3	PEM-X1 manual gun
4	intake tube ST 550/10
5	Powder injector, PI-F1
6	Fluid air throttle
7	Vibration table

Function:

The feed unit (4) is inserted directly into the original bundle. The powder is fed through the powder injector (5) to the powder spray gun (3). Due to the special arrangement of the suction crown and the vibration of the tank, a homogeneous powder/air mixture is generated and maintained during the entire duration of the powder feed. The powder quantity and the electrostatic charge of the color powder are regulated by the control unit (2). The fluid air setting is done using the throttle (6).

5.1.2 DESCRIPTION OF SPRINT 60 L XE TANK (WITHOUT VIBRATOR TABLE)

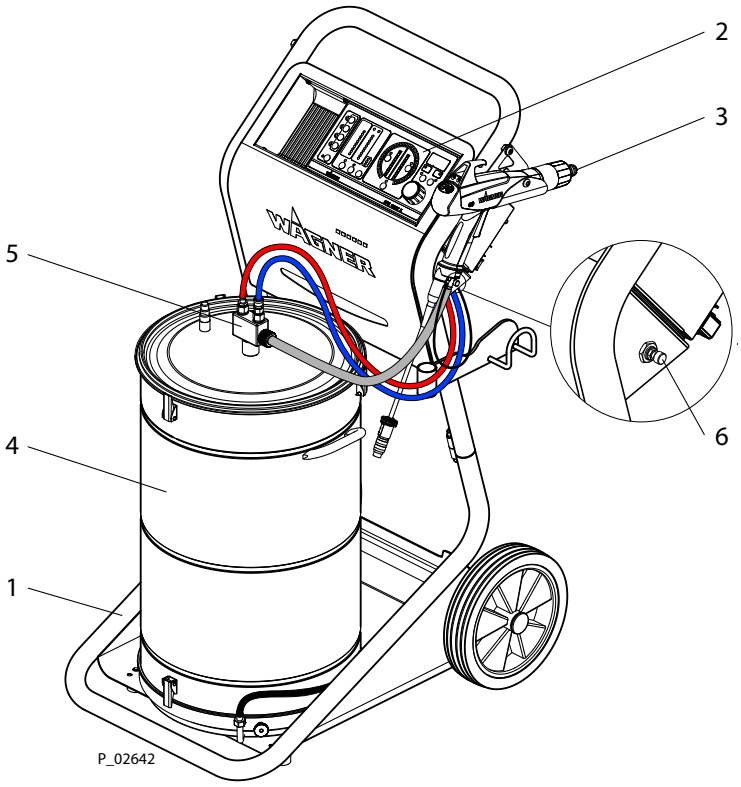

Pos	Designation
1	Equipment trolley
2	EPG-Sprint XE control unit
3	PEM-X1 manual gun
4	60 L tank
5	Powder injector, PI-F1
6	Fluid air throttle

Function:

Through the powder injector (5), the powder is transported from the tank (4) to the spray gun (3). By feeding fluid air into the fluid base of the powder tank (4), a homogeneous powder/air mixture is generated and maintained during the entire process of the powder feed from the tank.
The powder quantity and the electrostatic charge of the color powder are regulated by the control unit (2). The fluid air setting is done using the throttle (6).

Note:

We recommend using a vibrator table when working with powders that are difficult to feed (see Chapter 12.13).

5.1.3 OPERATING MODES

5.1.3.1 OPERATION WITH TRIBO GUN

When operating the manual system with a Tribo gun, the set values (total air volume, feed air volume, Tribo air volume) in recipes 1-4 must be adjusted. The setting of the values is described in the operating manual of the EPG-Sprint XE control unit.

The set values for operating with the Tribo gun should be saved to individually selected recipe locations.

When operating with a Tribo gun, parameter C11 on the EPG-Sprint XE control unit must be changed to Tribo. Please refer to the control unit operating manual for the procedure.

5.1.3.2 OPERATION WITH CORONA AND TRIBO GUN

To alternately operate a Corona or a Tribo gun, both guns can be connected to the system at the same time through a switchbox, which is available as an accessory. For more details, see Chapter .

The set values for operating with the Tribo gun should be saved to individually selected recipe locations.

5.2 INCLUDED ITEMS

5.2.1 VARIANTS

Order No.	Designation
2355400	Sprint Airfluid XE manual system (standard version)
2355403	Sprint 60 L XE manual system (standard version)
2355402	Sprint Airfluid XE manual system (US version)
2355404	Sprint 60 L XE manual system (US version)
2355800	Sprint Airfluid XE manual system (Japanese version)

When working with powders that are difficult to feed, the Sprint 60L XE manual system can be converted into a variant with a vibrator table (see Chapter 12.13).

5.2.2 STANDARD EQUIPMENT

Stk	Order No.	Designation
1	See Chapter 13.2	Sprint Airfluid XE manual system
1	See Chapter 13.3	Sprint 60 L XE manual system without tank
The standard equipment includes:		
1	See Chapter 15.3	Declaration of Conformity
1	2354919	Operating manual, German
1	See Chapter 1.3	Operating manual in local language

Manual systems with a Tribo lance are described in the corresponding operating manual (see Chapter 12.8).

5.2.3 TECHNICAL DATA

Dimensions:	
Height	1,120 mm; 44.10 inch
Width	595 mm; 23.43 inch
Depth	740 mm; 29.13 inch
Weight	approx. 40 kg; 88.18 lbs
Maximum box size	420x420x400 mm; 16.54x16.54x15.75 inches
Maximum filling weight of box	30 kg; 66.14 lbs

Electrical:	
Mains (AC) input terminal	90 VAC–250 VAC
Frequency	47 Hz–63 Hz
Input power	maximum 110 W
Mains (AC) output terminal	Vibrator motor maximum 70 W
Output voltage spray gun	maximum 22 Vpp
Output current spray gun	Max. 0.9 A
Corona current limitation	5 µA–120 µA (adjustable)
Tribo current cut off	greater than 12 µA (ATEX: switching off of the unit)

Pneumatic:	
Compressed air connection	G1/4"
Connection hose diameter	18.5x12.5 mm
Pressure range input air	0.6–0.8 MPa ; 6–8 bar; 87–116 psi
Air flow	maximum 15 m^3/h; 529.63 cf/h
Sum of feed and dosing air	2–12 m^3/h; 70.6–423.7 cf/h
Gun air	0.05–4.5 m^3/h; 1.765–158.9 cf/h
WAGNER injector type	PI-F1, HiCoat ED pump F, PI-F1-S
Compressed air quality according to ISO 8573.1	6.5.2 according to ISO 8573.1, 2010

⚠ WARNING

Exhaust air containing oil!
Risk of poisoning if inhaled.
Insufficient paint application quality
→ Provide compressed air free from oil and water
(Quality Standard 6.5.2 according to ISO 8573.1, 2010)
6.5.2 = particle density ≤ 5 mg/m^3; pressure dew point ≤ +7 °C;
oil content ≤ 0.1 mg/m^3



Ambient conditions:

If low-melting powders are used, the ambient temperature may have to be lower than 30 °C; 86 °F.

Volume measures for volumes specified in Nm^3 (standard cubic meters). One cubic meter of a gas at 0 °C and 1.013 bar is called norm cubic meter.

Displays:	
High voltage	0-100 kV resolution 10 kV
Corona current	0-120 µA resolution 5-20 µA
Tribo current	0-5 µA resolution 0.5 µA
Recipes	50 preset recipes
Switch over from Tribo to Corona	Automatic
Connectable spray gun types	WAGNER guns PEM-X1, PEM-C4, PEM-C4-Ergo, PEM-C4-Ergo FM, PEM-T3, Tribo lance TL 1

Ambient conditions:	
Operating temperature range	5–40 °C; 41–104 °F
Noise development	< 63 dB (mains pressure 0.6 MPa ; 6 bar; 87 psi)

5.3 OPERATION OF THE CONTROL UNIT

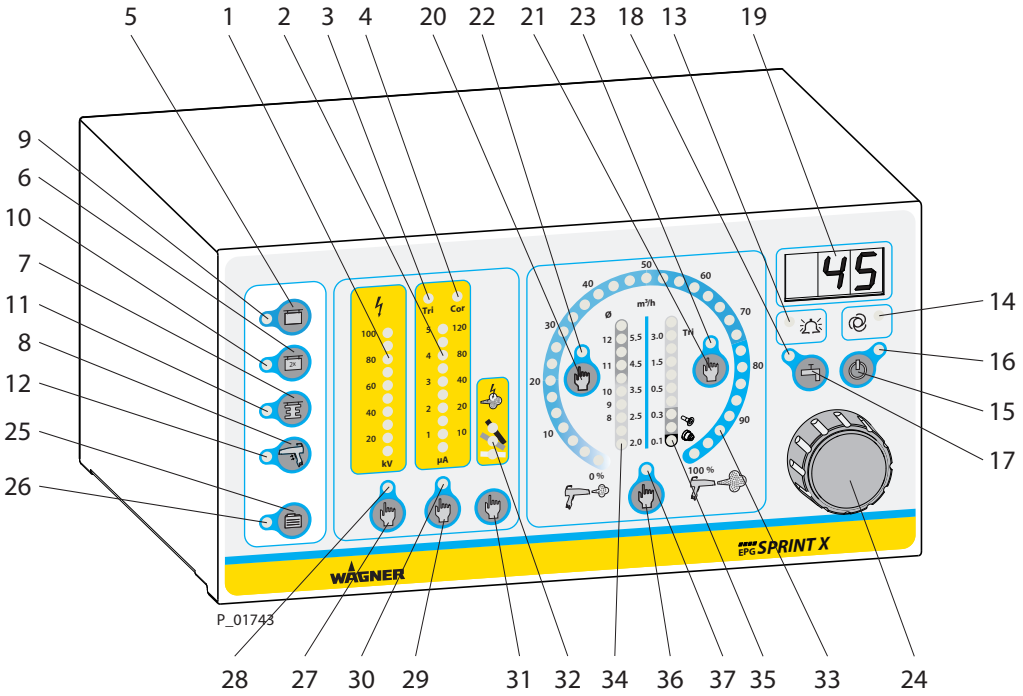

1 Illuminated display: "High voltage"
- Lights up green
- Display range: 0-100 kV
- Resolution 10 kV
- Single LED display: Nominal voltage
- Bar display: Working voltage

2 Illuminated display: "Corona or Tribo Current"
- Lights up green

Tribo scale:
- When a Tribo gun is connected and selected
- Bar display: When powder feed is activated
- Display range: 0-5 µA
  Resolution 0.5 µA

Corona scale:
- When a Corona gun is connected and selected
- Display and adjusting range: 0 [5]–120 µA,
  0 [5]–20 µA resolution 5 µA
  20-40 µA resolution 10 µA
  40-120 µA resolution 20 µA
- Single LED display: "Trigger Point of Current Limitation"
- Bar display: Corona current

3 Display: "Tribo Gun"
– Lights up when a Tribo gun is connected and selected

4 Display: "Corona Gun"
– Lights up when a Corona gun is connected and selected

5 Push button: recipe for "Surface Parts"

6 Push button: recipe for "Second Coating"

7 Push button: recipe for "Profiles"

8 Push button: recipe for "Double Click"
– To access the recipe, press the trigger lever on the spray gun twice in quick succession and hold it down

9 LED display: recipe for "Surface Parts"
– Lights up green when the recipe for surface part is selected

10 LED display: recipe for "Second Coating"
– Lights up green when the recipe for "Second Coating" is selected

11 LED display: recipe for "Profiles"
– Lights up green when the recipe for profile part is selected

12 LED display: recipe for "Double Click"
– Lights up green, when the recipe for "Double Click" is selected

13 LED display: "Fault"
– Lights up, when there is a fault on the device

14 LED display: "Automatic Gun"
– Lights up, when an automatic gun is connected

15 Push button: "Standby"
– To switch into standby mode
– High voltage and powder feed cannot be activated in this mode
– To reactivate normal mode, press the button again

16 LED display: "Standby"
– Lights up when the unit is in standby mode

17 Push button: "Flush"
– To activate the injector and the hose flushing

18 LED display: "Flush"
- Lights up blue, when the flush function is activated

19 LED display: 7 segments, three-digit number
- Indicates the exact value depending on the activated function:
  "Total air volume; atomizing, ionizing and Tribo air; additional recipes; high voltage; current limitation; powder quantity"
- Display showing error number in the event of warnings and malfunctions

20 Push button: "Total Air Volume"
- To activate the function, the value is precisely adjusted with rotary controller 24 and is indicated in LED display 19
- Adjusting range: 2-6 m^3/h
- Resolution: 0.05 m^3/h

21 Push button: "Atomizing, Ionizing and Tribo Air"
- To activate the function, the value is precisely adjusted with rotary controller 24 and is indicated in LED display 19
- Adjusting range: 0.1-4 m^3/h
- Resolution: 0.05 m^3/h

22 LED display: "Total Air"
- Lights up yellow, when the setting "Total Air" is selected

23 LED display: "Atomizing, Ionizing and Tribo Air"
- Lights up yellow, when the setting "Atomizing, Ionizing and Tribo Air" is selected

24 Universal control dial
- Dynamic digital control dial with 32 positions per revolution
- Adjustment speed is proportional to rotational speed
- Used to set: "Total air volume; atomizer, ionizer and Tribo air; additional recipes; high voltage; current limitation; powder quantity"
- For setting parameter values in configuration mode

25 Push button: "Additional Recipes"
- To activate the function, the additional recipes adjustment is set with the rotary controller (24) and is indicated in the LED display (19).
- Selection of the recipes 5 to 50

26 LED display: "Additional Recipes"
- Lights up yellow, when an additional recipe is selected

27 Push button "High voltage"
- To activate the function, the high voltage is set with rotary controller 24 and is indicated in LED Display 19
- Adjusting range: 10–100 kV
- Resolution: 1 kV

28 LED display: "High Voltage"
- Lights up yellow. The high voltage is selected and can be adjusted using rotary controller 24

29 Push button: "Current Limitation"
- To activate the function, the current limitation is set with the control dial 24 and is indicated in the LED display 19
- Adjusting range: 5–120 µA
- Resolution: 1 µA

30 LED display: "Current Limitation"
- Lights up yellow. The current limitation is selected and can be adjusted using the rotary controller (24).

31 Push button: "Characteristic Slope"
- To switch the characteristic slope
- Display with LED 32

32 LED display: "Characteristic Slope"
- Lights up green
- Lower LED characteristic curve, flat
- Middle LED characteristic curve, medium
- Upper LED characteristic curve, steep

33 Illuminated display: "Powder Quantity"
- Lights up green
- Display range: 0–100 %
- Resolution: 3.33 %
- Single LED display: Set point (high voltage and powder are deactivated)
- Bar display: Actual value (high voltage and powder are activated)

34 Illuminated display: "Total Air Volume"
- Lights up green
- Display range: 2–6 m^3/h
- Resolution: 0.2–0.5 m^3/h
- Single LED display: Set point (high voltage and powder are deactivated)
- Bar display: Actual value (high voltage and powder are activated)

35 Illuminated display: "Atomizing, Ionizing and Tribo Air Volume"
- Lights up green
- Display range: 0.1–4 m^3/h
- Resolution: 0.1–1.0 m^3/h
- Single LED display: Set point (high voltage and powder are deactivated)
- Bar display: Actual value (high voltage and powder are activated)

36 Push button: "Powder Quantity"
- To activate the function, the powder quantity is set with rotary controller 24 and is indicated in LED display 19.
- Adjusting range: 1–100%
- Resolution: 1%

37 LED display: "Powder Quantity"
- Lights up yellow, when the powder quantity is selected

6 COMMISSIONING

6.1 TRAINING OF ASSEMBLY/COMMISSIONING STAFF

→ The assembly and commissioning staff must have the technical skills to safely commission the device.

→ When assembling, commissioning and carrying out all work, read and follow the operating manuals and safety regulations for the additionally required system components.

A skilled person must check to ensure that the device is in a reliable state after it is installed and commissioned.

6.2 STORAGE CONDITIONS

Until the point of assembly, the device must be stored in a dry location, free from vibrations and with a minimum of dust. The device must be stored in closed rooms.

The air temperature at the storage location must be between -20 °C and +60 °C (-4 °F and +140 °F).

The relative air humidity at the storage location must be between 10 and 95% (without condensation).

6.3 INSTALLATION CONDITIONS

The air temperature at the installation site must be in a range between 0 °C and 40 °C; 32 °F and 104 °F.

The relative air humidity at the installation site must be between 10 and 95% (without condensation).

6.4 ASSEMBLING THE MANUAL SYSTEM

6.4.1 ASSEMBLING THE EQUIPMENT TROLLEY

The manual system's trolley is supplied unassembled for transport reasons. It must be assembled as described below.

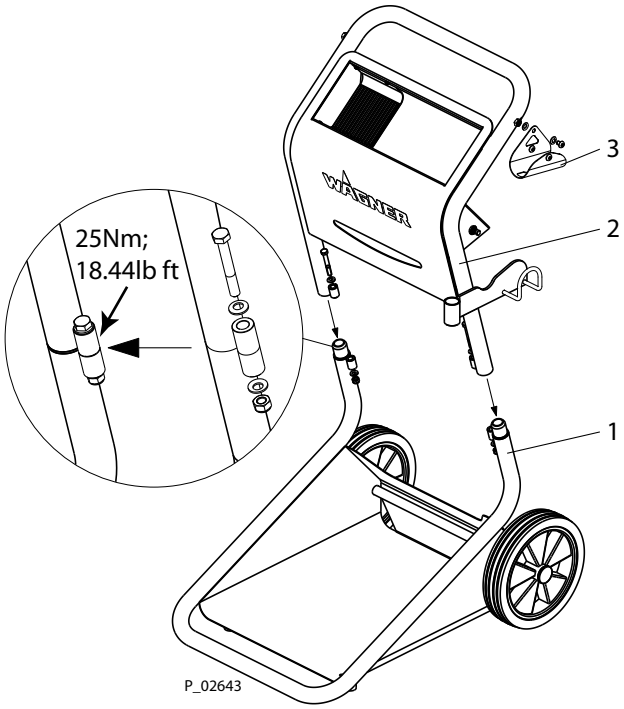

Procedure:

1. Open transport packaging with care and carefully take all single parts out of packaging.
2. Place lower trolley section (1) on a clean, level surface.
3. Place upper trolley section (2) on the two guide sleeves on the lower trolley section (1), press down gently until stop is reached and use nuts and bolts (see detail) to screw to lower trolley section (tightening torque 25 Nm; 18.44 lb/ft).
4. Mount the gun holder (3) (see separate assembly manual).

6.4.2 ASSEMBLING THE CONTROL UNIT

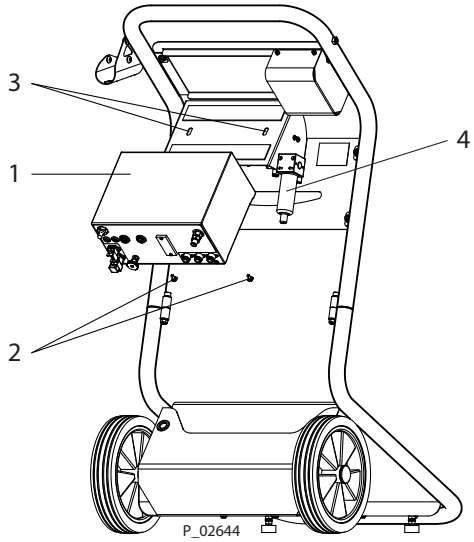

Procedure:

1. Carefully take control unit (1) out of packaging and use the supplied screws (2) to screw into the holes drilled in the angle bracket (3).
   Mount the control unit such that it is flush with the cover at the front.

6.5 CONNECTING THE MANUAL POWDER SYSTEM

The assembly of the manual powder system is the same for the Corona spray gun and for the Tribo spray gun.

The manual system is equipped with a filter water separator (4) as a standard feature. Nevertheless, a high compressed air quality is still required for safe operation of the system. The plant operator is responsible ensuring the required compressed air quality.

6.5.1 CONNECTION REQUIREMENTS

⚠ DANGER

Danger from electric current!

Danger to life and equipment damage.

→ Switch off the main switch 1 on the rear of the equipment before connecting the equipment.



Ⓘ NOTICE

Missing cover!

Protection class of device not guaranteed.

→ The mains output socket must remain closed in manual systems without vibrator motor with the cover closed.

without vibrator motor:

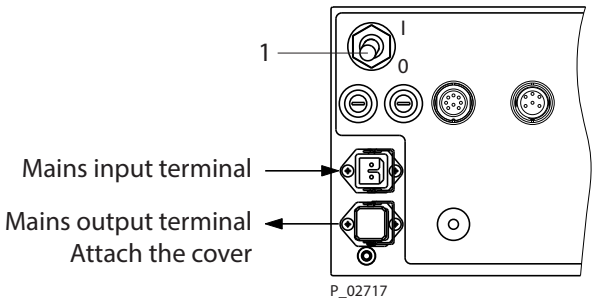

with vibrator motor:

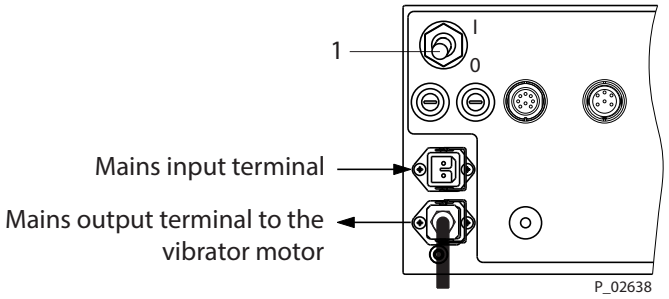

6.5.2 CONNECTING THE AIRFLUID MANUAL POWDER SYSTEM

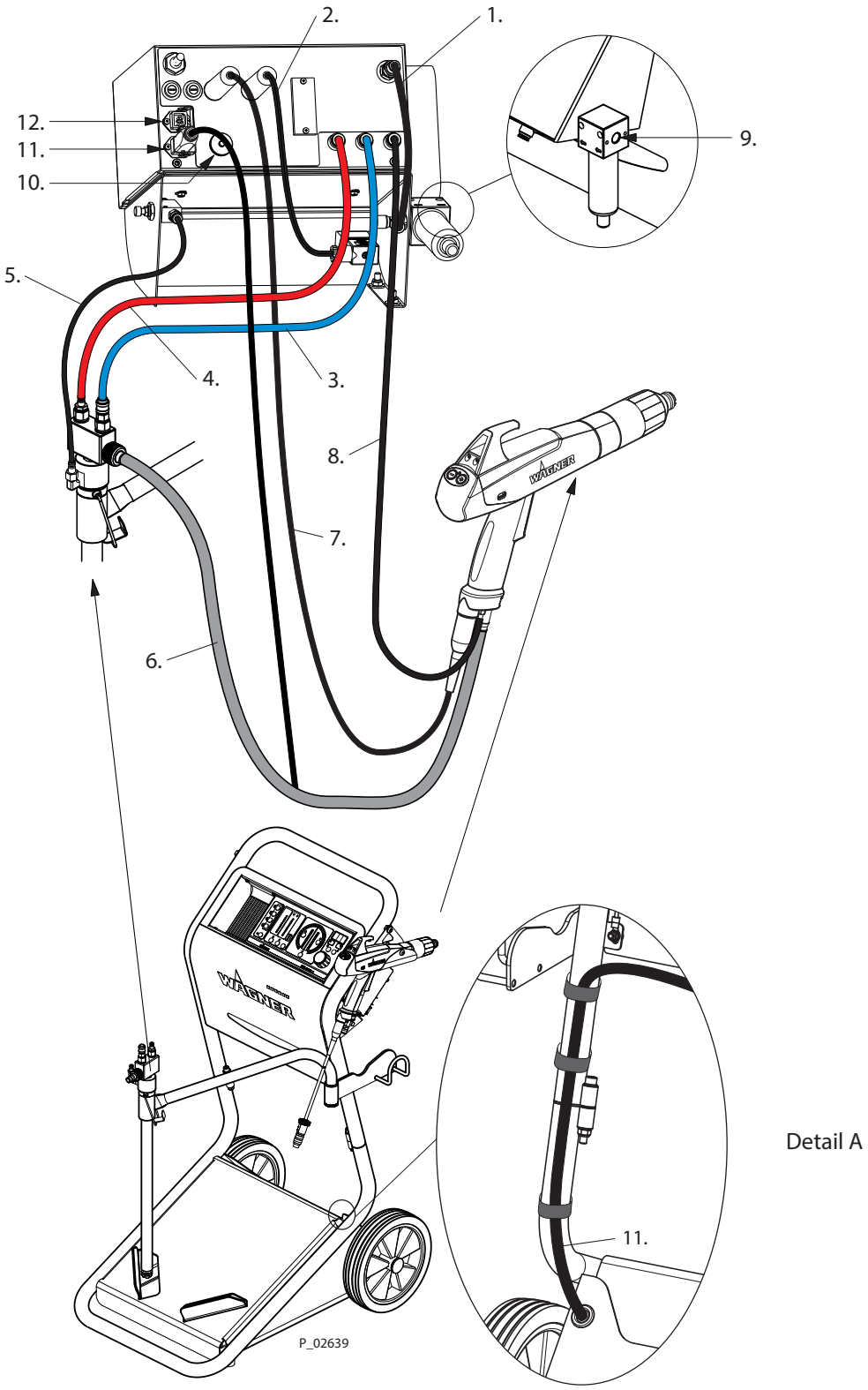

Detail A

Procedure:

1. Connect the hose (black) for mains pressure.
2. Plug in the control cable from the solenoid valve on the control unit.
3. Connect the dosing air hose (blue).
4. Connect the feed air hose (red).
5. Connect the fluid air hose (black).
   Bundle the three hoses with Velcro cable binders.
6. Connect the powder feed hose.
7. Plug in the gun connection cable on the control unit.
8. Connect the hose (transparent) for the atomizing or Tribo air.
   Bundle the two hoses and the gun cable with Velcro cable binders.
9. Connect the compressed air hose (12.5x18.5 mm, Order No. 9981951) to the compressed air connection (G1/4") on the manual system.
10. Connect the trolley grounding cable to the control unit.
    Connect the control unit's grounding cable with the signal ground!
11. Plug in the connection cable from the vibrator motor on the control unit.
    Fasten the connection cable to the trolley with the delivered Velcro cable binders (Detail A).
12. Plug in the control unit mains cable.
13. Connect mains cable to the power supply.

6.5.3 CONNECTING THE 60 L TANK MANUAL SYSTEM

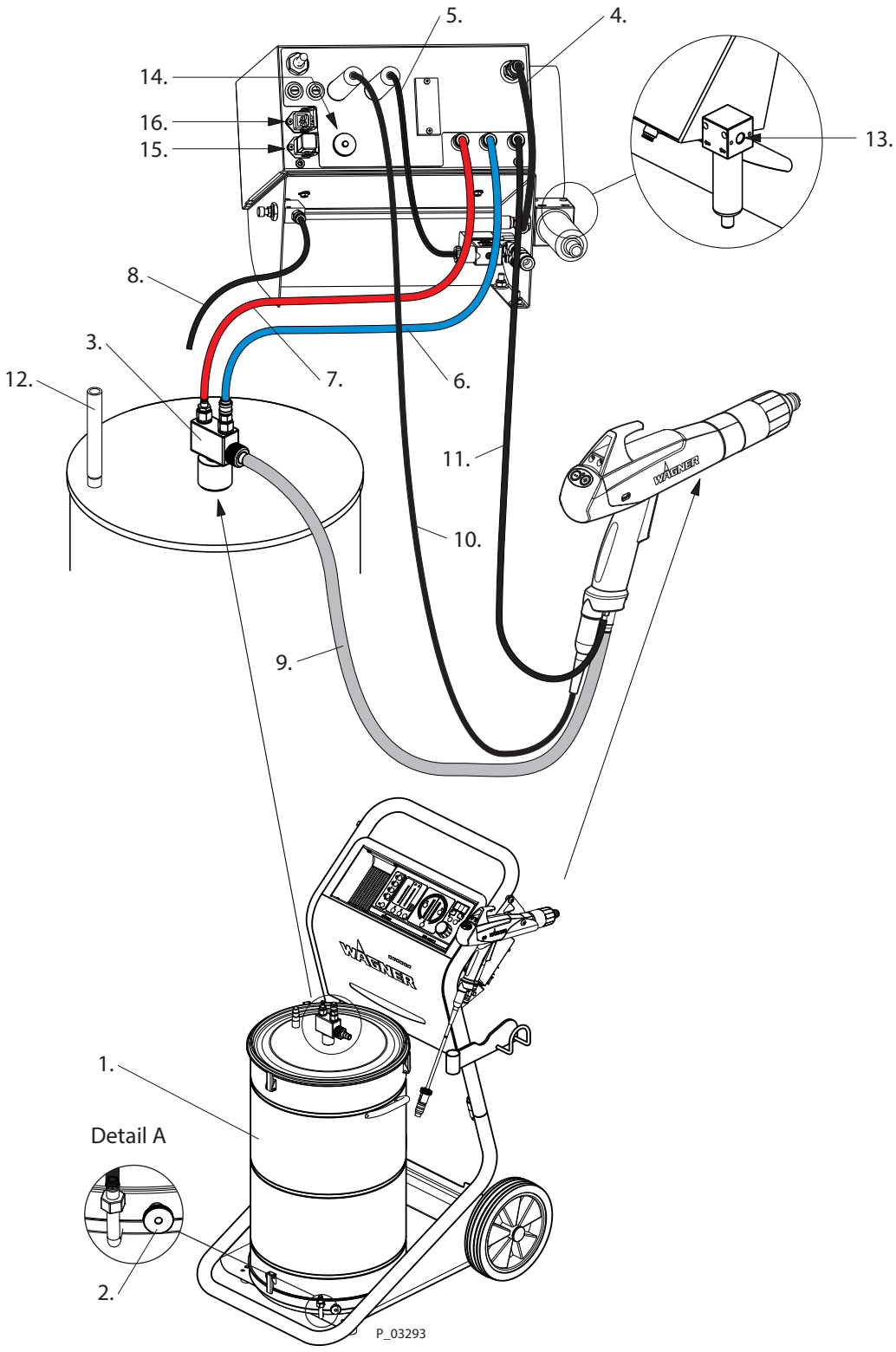

Procedure:

1. Place the powder tank on the trolley.
2. Connect the grounding cable to the grounding connection of the powder tank (Detail A).
3. Attach injector to powder tank.
4. Connect the hose (black) for mains pressure.
5. Plug in the control cable from the solenoid valve on the control unit.
6. Connect the dosing air hose (blue).
7. Connect the feed air hose (red).
8. Connect hose (black) for the fluid air to the valve and to the tank (Detail A).
   Bundle the three hoses with Velcro cable binders.
9. Connect the powder feed hose.
10. Plug in the gun connection cable on the control unit.
11. Connect the hose (transparent) for the atomizing or Tribo air.
    Bundle the two hoses and the gun cable with Velcro cable binders.
12. Connect exhaust air hose to the connection on the powder tank.
    The other end of the exhaust air hose must be routed to the extraction unit of the powder spray booth.
13. Connect the compressed air hose (12.5x18.5 mm, Order No. 9981951) to the compressed air connection (G1/4") on the manual system.
14. Connect the trolley grounding cable to the control unit.
    Connect the control unit's grounding cable with the signal ground!
15. Attach the cover to the mains output terminal from the controller.
16. Plug in the control unit mains cable.
17. Connect mains cable to the power supply.

6.6 GROUNDING

For security reasons the manual system must be properly grounded. Normally this is done via the mains cable.
Good grounding of the work piece is also necessary for optimum powder coating.
It is important to keep the ground cables as short as possible. Ground cables of an excessive length must be shortened. Ground cables of an excessive length must never be wound up on a roller.

A poorly grounded work piece causes:

- dangerous electric charging of the work piece,
- very poor wrap-around,
- uneven coating,
- back spraying to the spray gun, i.e., contamination.

Prerequisites for perfect grounding and coating of a work piece are:

- clean suspension of the work piece to be coated,
- The grounding resistance of the work piece must not exceed 1 MΩ.
  (Resistance to ground measured at 500 V or 1000 V).

**Sparks between conveyor, conveyor hooks (hangers) and work piece can occur if electric contact points between conveyor, conveyor hooks (hangers) and work piece are not sufficiently cleaned and therefore the work pieces are not sufficiently grounded!
These sparks can cause heavy radio frequency interference (EMC).**

6.6.1 GROUNDING THE POWDER COATING SYSTEM

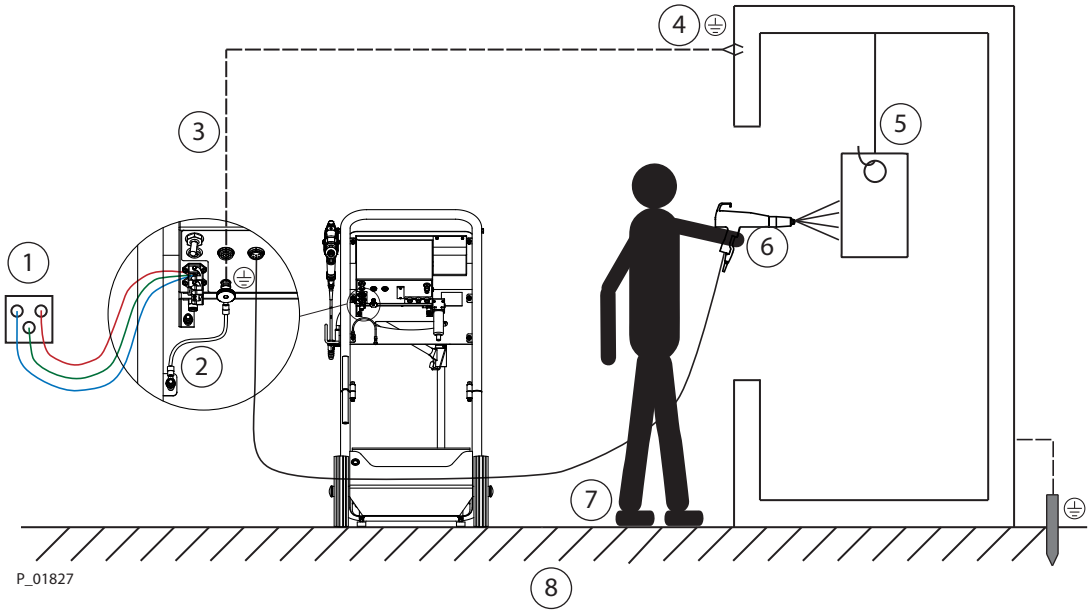

1 Only use mains cables with grounding strand!
2 Connect the trolley's grounding cable to the grounding connection of the control unit!
3 Connect the control unit's grounding cable with the signal ground!
4 Connect grounding cable to an uncoated metal part of the booth!
5 Remove all paint from hooks and other hanger parts!
6 Wear electrostatically conductive gloves!
7 Wear electrostatically conductive footwear!
8 The floor must be electrostatically conductive!

6.7 SAFETY CHECKS



A skilled person must check to ensure that the device is in a reliable state after it is installed and commissioned.
This includes:

– Carry out a safety checks in accordance with Chapter 8.2.3.

7 OPERATION

7.1 TRAINING THE OPERATING STAFF

→ The operating staff must be qualified to operate the entire system.

→ The operating staff must be familiar with the potential risks associated with improper behavior as well as the necessary protective devices and measures.
→ Before work commences, the operating staff must receive appropriate system training.

7.2 WORK

Ensure that:

→ The regular safety checks are carried out in accordance with Chapter 8.2.3,
→ commissioning is carried out in accordance with Chapters 6.4 and 6.5.

7.2.1 SWITCHING ON THE MANUAL SYSTEM

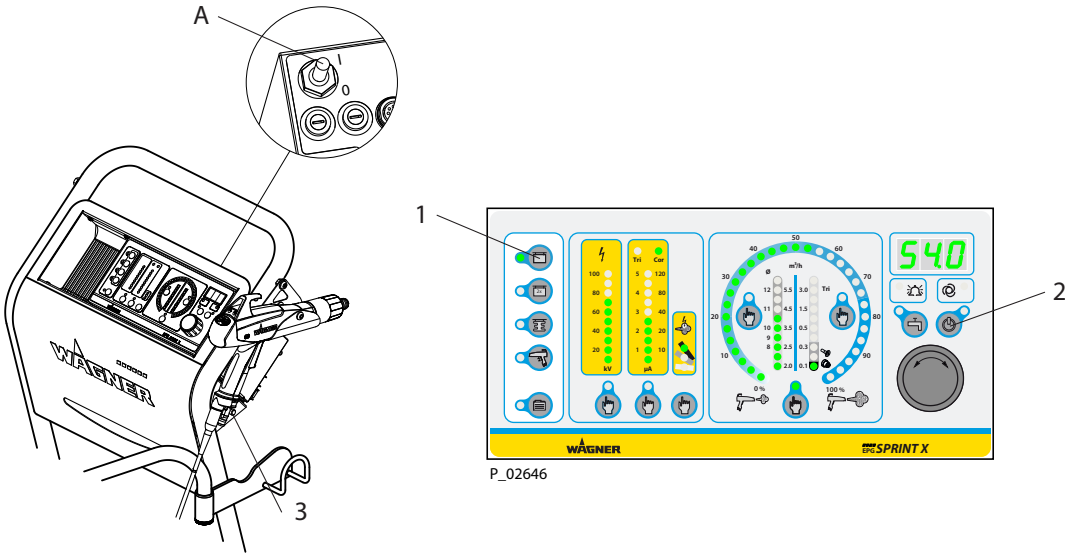

P_02646

To turn the power supply of the manual powder system on, set the mains switch on the back side (A) of the control unit to position "I".

- After a few seconds the control unit is operational.
- The system switches to recipe 1 "Surface parts" after every restart.
- To switch the manual system off or on, actuate the "Standby" push button (2).

Note:

- The fluid air must be adjusted using the throttle (3), when first commissioning the manual system.
- The control unit automatically recognizes the type of gun connected.
- There are 50 recipes available for the spray gun.
- When a Tribo gun is connected, the Tribo current scale is activated, while the high-voltage supply and control unit are deactivated.
- All airs are only switched on once the manual gun's trigger has been actuated.

7.2.2 ADJUSTING THE FLUIDIZATION (AIRFLUID)

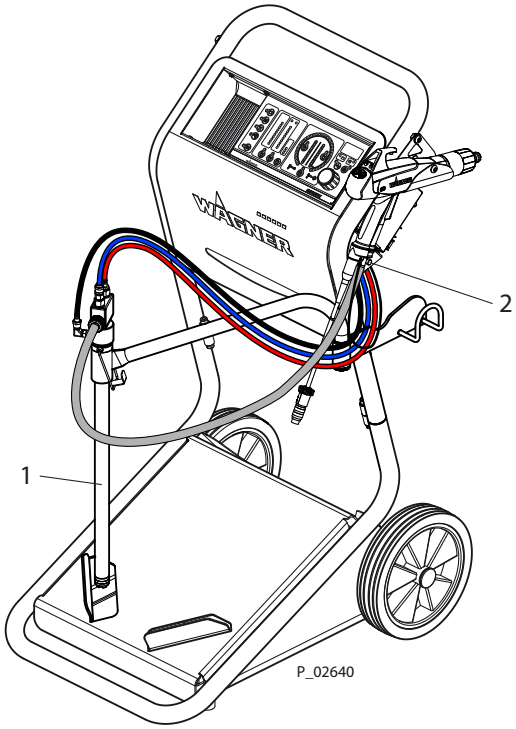

Procedure:

1. Swivel the feed unit (1) to the right side.
2. Place an opened powder tank (25–30 kg; 55.11–66.14 lbs) on the vibrator table.
3. Switch on the control unit.
4. Swivel the feed system (1) into the powder tank and lower it down to the powder surface. Actuate the trigger of the spray gun for a short time and release it. The vibrator motor and the fluid air overrun for 10 s (factory setting). This setting can be changed by the user if required (see EPG-Sprint XE control unit operating manual).
5. Adjust the fluid air at the throttle (2) to the point that it makes the feed system sink into the powder due to its own weight.

Note:

– The amount of fluid air depends on the characteristics of the powder.
– The powder should be moving in the suction area of the feed unit (gently simmering).
– Avoid a dust build up in the powder tank.

7.2.3 ADJUSTING FLUIDIZATION (60 L TANK WITHOUT VIBRATOR TABLE)

⚠ WARNING

Dust formation!

Risk of poisoning if inhaled.

Danger due to escaping dust, contamination of the device and device components.

→ The powder tank may only be filled to the halfway mark, because fluidizing increases the volume of powder.



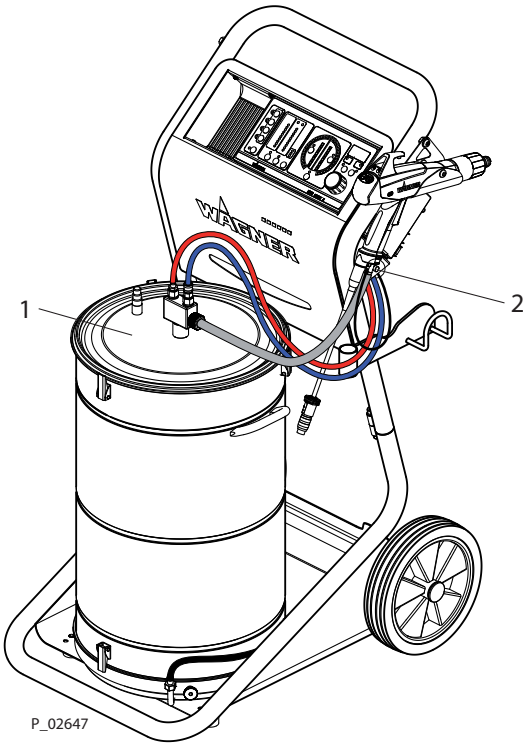

Procedure:

1. Open the lid and fill the powder tank (1) halfway with powder.
2. Switch on the control unit.
3. Set the "Vibrator motor controller" parameter, on the control unit, to "ON" to permanently activate the fluid air (see the EPG-Sprint XE control unit operating manual).
4. Actuate the trigger of the spray gun for a short time and release it.
5. Adjust the fluid air at the throttle (2) until fluidization is recognizable.

   Note:

   – The amount of fluid air depends on the characteristics of the powder.

   Avoid a build up of powder dust (too much fluid air) in the powder tank!
6. Close the powder tank 1 and check whether the exhaust air hose is leading in the direction of the ventilation system of the powder coating booth.

Note:

– We recommend using a vibrator table when working with powders that are difficult to feed (see Chapter 12.13).

7.3 FACTORY SETTING RECIPE NOS. 1–4

The following set values are stored in recipe Nos. 1–4 in the factory.

Recipe no.	Designation	Characteristic	High voltage [kV]	Current limitation [µA]	Characteristic curve	Total air [m^3/h]	Feed air [%]	Atomizing air [m^3/h]
P01	Flat part	High surface coverage	90	80	Standard	4.0	70	0.1
P02	Second coating	Avoidance of spraying back	50	20	Soft	3.6	57	0.1
P03	Profile part	Penetration and reduced build-up of edges	70	40	Soft	3.6	50	0.1
P04	Double click	Small components	80	20	Soft	3.6	45	0.1
P05–50	variable	individual	80	100	Standard	4.5	80	0.1

Notes:
Under normal conditions, metallic powder can be processed well using recipes Nos.1–4.
When operating the system with a Tribo gun, the values for total air, powder flow and Tribo air must be adjusted accordingly and saved.
With the 3 L tank variant, the values must also be adjusted individually and saved.

7.4 INTERRUPTING THE COATING PROCESS

7.4.1 AIRFLUID VERSION

NOTICE

Powder residues and sticking fluid disk!

Equipment damage and danger of blockage.

→ Before the control unit is deactivated, the feed unit must be pulled out of the powder tank.

→ At every work interruption, blow through the spray gun and the powder feed components and clean from any powder residues.

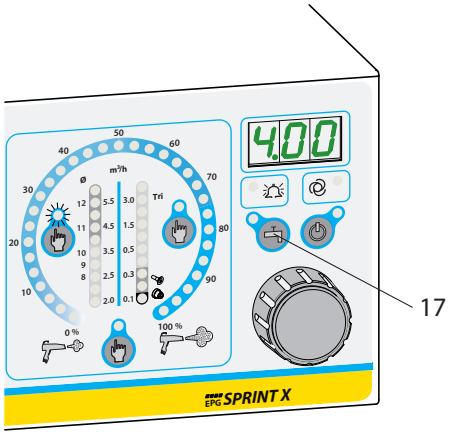

P_01785

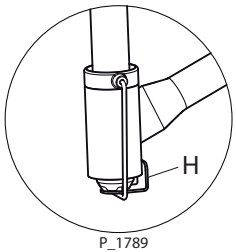

P_1789

Procedure:

1. Release the trigger on the spray gun.
   The high voltage and the powder feed are deactivated.
2. Lift the feed unit up, underneath the injector, and lift it out of the tank until retaining clamp (H) swivels downwards.
3. Lower the feed system into the parking position and swivel it to the right side so that no more powder is forwarded.
4. Hold the gun in the spray booth and start the flush function by pressing the "Flush" button (17).
   The injector and hoses are flushed.
5. Now the control unit can be switched off.

7.4.2 60 L TANK VERSION

NOTICE

Powder residues!

Damage to the device.

→ At every work interruption, blow through the spray gun and the powder feed components and clean from any powder residues.

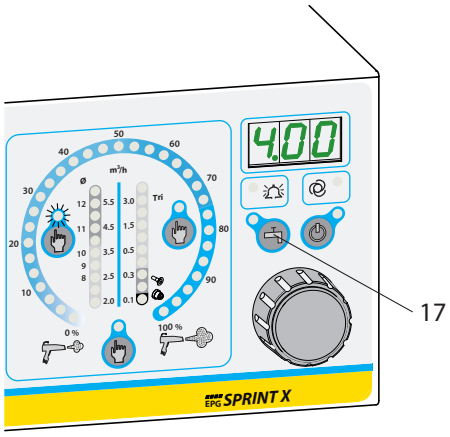

P_01785

Procedure:

1. Release the trigger on the spray gun.
   The high voltage and the powder feed are deactivated.
2. Remove the injector from the holder to stop powder feed.
3. Hold the gun in the spray booth and start the flush function by pressing the "Flush" button (17).
   The injector and hoses are flushed.
4. Switch off control unit.

7.5 PERFORMING A PAINT CHANGE

7.5.1 AIRFLUID VERSION

Note:
For a paint change, all components of the powder feed system must be thoroughly cleaned.

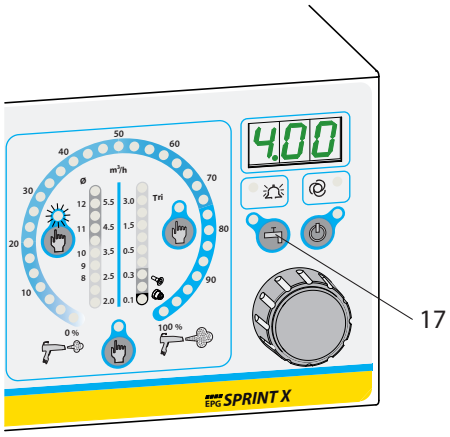

P_01785

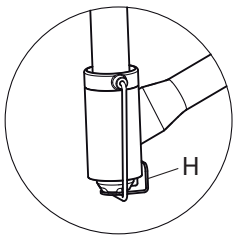

P_1789

Procedure:

1. Release the trigger on the spray gun.
   The high voltage and the powder feed are deactivated.
2. Lift the feed unit up, underneath the injector, and lift it out of the tank until retaining clamp (H) swivels downwards.
3. Lower the feed system into the parking position and swivel it to the right side so that no more powder is forwarded.
4. Hold the gun in the spray booth and start the flush function by pressing the "Flush" button (17).
   The injector and hoses are flushed.
5. Switch off control unit.
6. Clean all powder feeding parts of the unit, such as the spray gun, the injector and the powder feed hose.
7. Place an opened powder tank (25–30 kg; 55.11–66.14 lbs) with the new powder on the vibrator table.
8. Swivel retaining clamp (H) away, lower the feed unit to the powder surface, actuate the trigger of the spray gun for a short time and then release it.
9. Adjust the fluid air at the throttle to the point that the feed unit sinks into the powder due to its own weight.

To adapt the programs to the new applications proceed as described in the EPG-Sprint XE control unit's operating manual.

7.5.2 60 L TANK VERSION

7.5.2.1 CLEANING PROCESS WHEN USING A SINGLE POWDER TANK

Note:
For a paint change, all components of the powder feed system must be thoroughly cleaned.

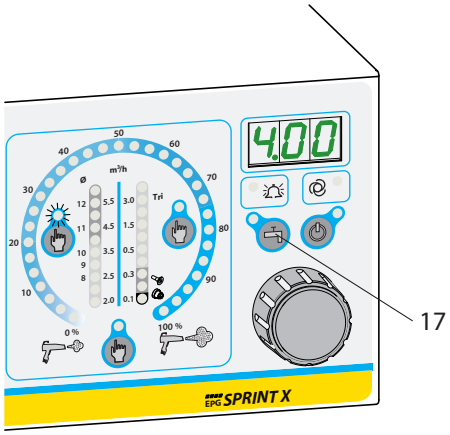

P_01785

Procedure:

1. Release the trigger on the spray gun.
   The high voltage and the powder feed are deactivated.
2. Remove the injector from the holder to stop powder feed.
3. Hold the gun in the spray booth and start the flush function by pressing the "Flush" button (17).
   The injector and hoses are flushed.
4. Switch off control unit.
5. Open the powder tank and clean all powder feeding parts of the unit,
   such as the spray gun, the injector, the powder feed hose and the suction system.
6. Clean the powder tank and pay special attention to the fluid base.
   Note:
   Proper fluidization is not possible with a damaged and/or clogged fluid base.

To adapt the programs to the new applications proceed as described in the EPG-Sprint XE control unit's operating manual.

7.5.2.2 CLEANING PROCESS WHEN USING MULTIPLE POWDER TANKS

Note:
For a paint change, all components of the powder feed system must be thoroughly cleaned.

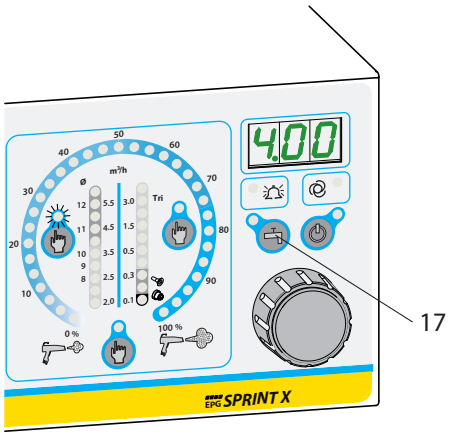

P_01785

Procedure:

1. Release the trigger on the spray gun.
   The high voltage and the powder feed are deactivated.
2. Remove the injector from the holder to stop powder feed.
3. Hold the gun in the spray booth and start the flush function by pressing the "Flush" button (17).
   The injector and hoses are flushed.
4. Switch off control unit.
5. Loosen the powder feed hose from the powder injector and clean the spray gun and the powder feed hose thoroughly.
6. Loosen the blue dosing air hose and the red feed air hose from the powder injector.
7. Disconnect the black fluid air hose from the powder tank.
8. Loosen the grounding cable from the powder tank.
9. Replace the powder tank.
10. Reconnect all the hoses and ground the powder tank by connecting to the grounding cable.

Note:
Proper fluidization is not possible with a damaged and/or clogged fluid base.

7.5.2.3 RESTARTING THE MANUAL POWDER SYSTEM

Procedure:

1. Check if the control unit is switched off.
2. Open the powder tank.

> **⚠ WARNING**
>
> **Dust formation!**
>
> Risk of poisoning if inhaled.
>
> Danger due to escaping dust, contamination of the device and device components.
>
> → The powder tank may only be filled to the halfway mark, because fluidizing increases the volume of powder.



3. Switch on the control unit and activate the "Powder Feed Quantity" function by pressing the "Powder Quantity" button (36).
4. Adjust the powder quantity to 0% with the universal rotary controller (24).
5. Actuate the trigger and keep it actuated.
6. Adjust the fluid air at the throttle until fluidization is recognizable.
   Note:
   The fluid air quantity is dependent on the powder condition.
   Avoid a build up of powder dust (too much fluid air) in the powder tank!
7. Close the powder tank and check whether the exhaust air hose is leading in the direction of the ventilation system of the powder coating booth.

To adapt the programs to the new applications proceed as described in the EPG-Sprint XE control unit's operating manual.

7.6 "DOUBLE CLICK" RECIPE (HIGH DYNAMIC REMOTE)

This function is used to change quickly to another recipe during a coating operation. The operator can access a previously set recipe by double-clicking on the trigger lever on the spray gun, for example to recoat parts using different parameters (high voltage, current limitation, air volumes etc.).
To access the function, press the trigger lever on the spray gun twice in quick succession and hold down. Upon releasing the trigger, the original recipe will be returned to.

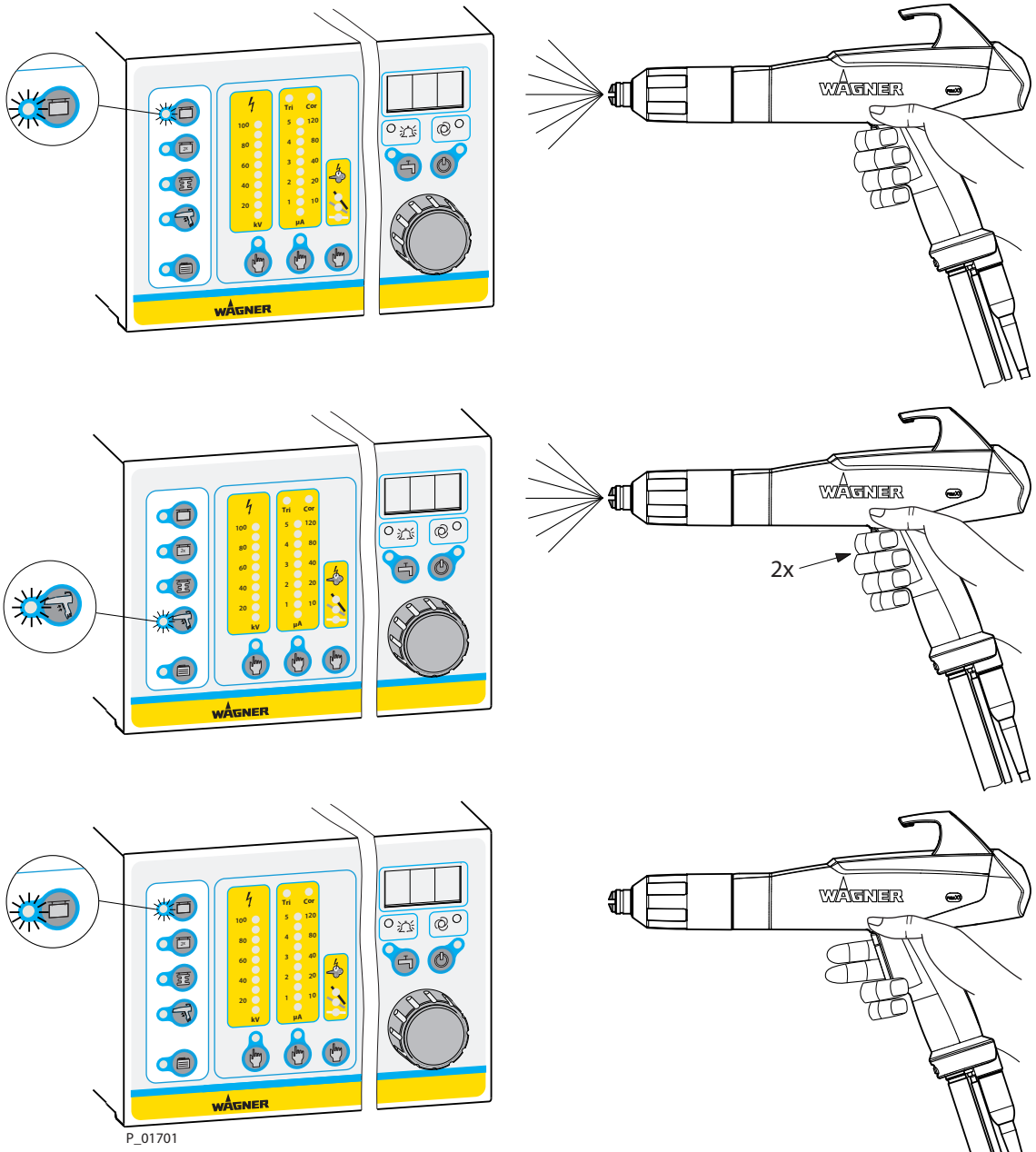

P_01701

8 CLEANING AND MAINTENANCE

8.1 CLEANING

8.1.1 CLEANING STAFF

Cleaning work should be undertaken regularly and carefully by qualified and trained staff. They should be informed of specific hazards during their training.

The following hazards may arise during cleaning work:

- Health hazard from inhaling powder lacquer
- Use of unsuitable cleaning tools and aids

8.1.2 FLUSHING AND CLEANING THE SYSTEM

The cleaning intervals should be adapted by the operator depending on the level of use and if necessary the level of soiling.
If in doubt, we recommend contacting WAGNER's specialist personnel.

8.2 MAINTENANCE

8.2.1 MAINTENANCE STAFF

Maintenance work should be undertaken regularly and carefully by qualified and trained staff. They should be informed of specific hazards during their training.

The following hazards may arise during maintenance work:

- Health hazard from inhaling powder lacquer
- Use of unsuitable tools and aids

An authorized person must ensure that the device is checked for being in a reliable state after maintenance work is completed.

8.2.2 MAINTENANCE INSTRUCTIONS

⚠ DANGER

Incorrect maintenance/repair!
Danger to life and equipment damage.



→ Only a WAGNER service center or a suitably trained person may carry out repairs and replace parts.
→ Only repair and replace parts that are listed in the "Spare parts" chapter and that are assigned to the unit.
→ Before all work on the device and in the event of work interruptions:
  - Switch off the energy and compressed air supply.
  - Relieve spray gun and device pressure.
  - Secure the spray gun against actuation.
→ Observe the operating and service manual for all work.

Prior to maintenance

– Flush and clean the system. → Chapter 8.1.2.

After maintenance

– Carry out safety checks in accordance with Chapter 8.2.3.

8.2.3 SAFETY CHECKS

8.2.3.1 GROUNDING CHECK

Daily: Before starting work, carry out a visual inspection to ensure that the system is grounded.

8.2.4 MAINTENANCE PROCEDURES

The maintenance intervals should be adapted by the operator depending on the level of use and if necessary the level of soiling.
If in doubt, we recommend contacting WAGNER's specialist personnel.

Maintenance work	Time stamp	
	per shift	weekly
Blow out gun and check for sintering	x	
Check gun settings	x	
Check gun discharge pressure	x	
Blow out powder hoses	x	
Check grounding		x
Check compressed air quality		x
Check gun voltage		x
Check powder hoses for bends and sintering		x

8.3 PERIODIC CHECKING OF THE MANUAL SYSTEM

8.3.1 AIRFLUID VERSION

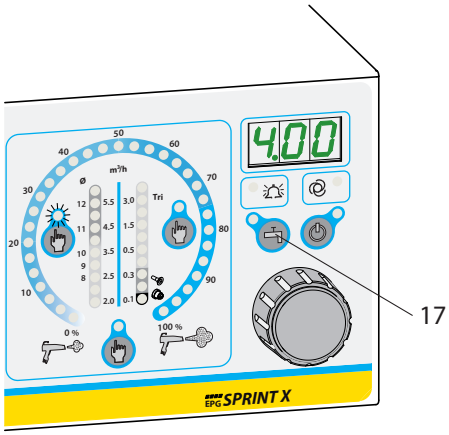

P_01785

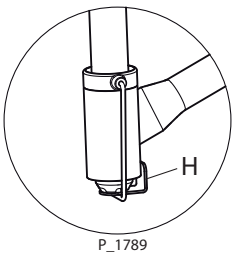

P_1789

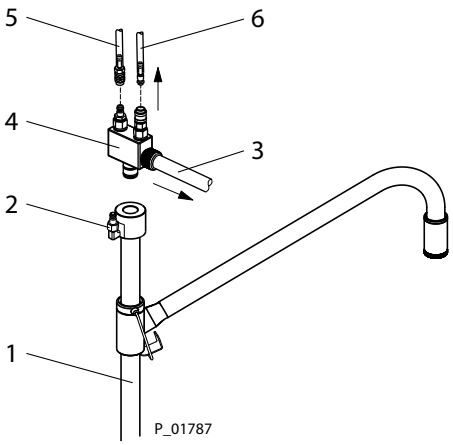

P_01787

Procedure:

1. Release the trigger on the spray gun.
   The high voltage and the powder feed are deactivated.
2. Lift the feed unit up, underneath the injector, and lift it out of the tank until retaining clamp (H) swivels downwards.
3. Lower the feed system into the parking position and swivel it to the right side so that no more powder is forwarded.
4. Hold the gun in the spray booth and start the flush function by pressing the "Flush" button (17).
   The injector and hoses are flushed.
5. Switch off control unit.
6. Remove the union nut on powder feed hose (3) and disconnect powder feed hose (3) from injector (4).
7. Disconnect powder feed hose (5) (red) from injector (4).
8. Disconnect dosing air hose (6) (blue) from injector (4).
9. Pull the fluid air hose (black) off suction connector (2).
10. Pull injector (4) out of feed unit (1).
11. Check injector 4 for wear and replace worn parts if necessary.
    The wearing and spare parts can be found in the powder injector's operating manual.
12. Pull feed unit (1) out of the holder arm.
13. Blow out the intake tube of the feed unit (1) thoroughly and rub it clean with a dry cloth.
14. Check whether the fluid disk on the bottom of the feed unit is blocked and replace if necessary.

8.3.2 60 L TANK VERSION

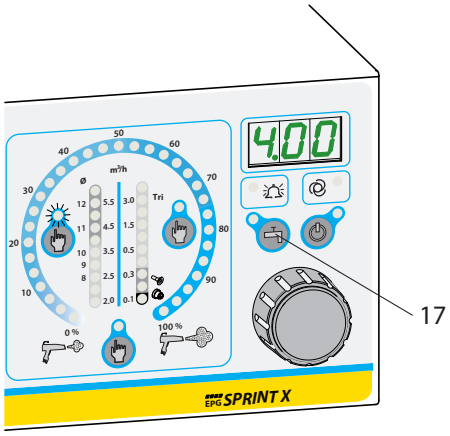

P_01785

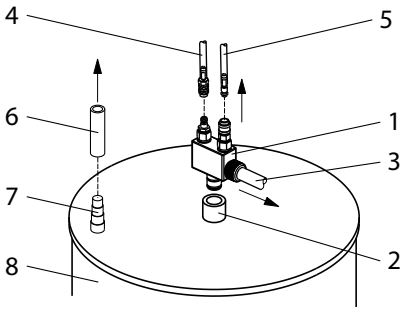

P_01140

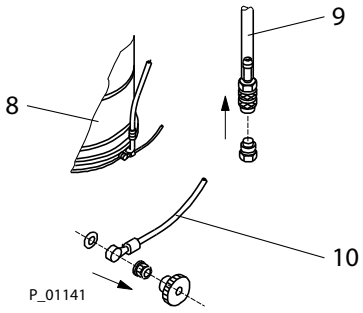

P_01141

Procedure:

1. Release the trigger on the spray gun.
   The high voltage and the powder feed are deactivated.
2. Remove powder injector (1) from holder (2).
3. Hold the gun in the spray booth and start the flush function by pressing the "Flush" button (17).
   The injector and hoses are flushed.
4. Switch off control unit.
5. Release the union nut on powder feed hose (3) and disconnect powder feed hose (3) from injector (1).
6. Disconnect the red feed air hose (4) from injector (1).
7. Disconnect the blue dosing air hose (5) from the injector (1).
8. Check powder injector for wear and replace worn parts if necessary.
   The wearing and spare parts can be found in the powder injector's operating manual.
9. Loosen the exhaust air hose (6) from the connection (7) of the powder tank (8).
10. Pull the black fluid air hose (9) off the powder tank (8).
11. Loosen the grounding cable (10) from the powder tank (8).
12. Lift the powder tank off from the equipment trolley for cleaning.
13. Open the lid of the powder tank to empty the powder tank and thoroughly blow out the powder tank.
14. Completely remove all residual powder from the suction system.
15. Pay special attention when cleaning the fluid base, check it for blockage or damage and replace it if necessary.
    The wearing and spare parts are in the "Spare Parts" chapter of this operating manual.

9 TROUBLESHOOTING AND RECTIFICATION

Malfunction	Cause	Remedy
Power indicator does not light up No Corona power supply	– Mains supply not switched on	– Turn on mains.
	– 2 AT fuses defective.	– Replace fuses.
	– The connection cable to the powder spray gun is interrupted.	– To replace the connection cable, notify the WAGNER service department or qualified personnel.
	– The powder spray gun is too close to the work piece.	– Switch off the high voltage, increase the distance between the spray gun and the work piece and then switch the high voltage on again. Should an error message be displayed again, inform the WAGNER Service Department.
	– The grounding between control unit and powder spray gun is interrupted.	– Contact WAGNER Service Department
Sputtering powder feed	– The flow rate in the powder feed hose is too low.	– Increase the total feed and dosing air and readjust the ratio of the airs to each other.
	– The cross section of the powder feed hose is reduced by movement.	– Use a powder hose that prevents the cross section from narrowing (Select a hose with a thicker wall.).
	– Fluctuations in the compressed air caused by short-term increase of the compressed air consumption in the supply system.	– Install compressed air storage directly in front of high consumption system components.
Dust buildup above the drum or the powder tank	– Too much fluid air.	– Reduce the fluid air at the throttle.
	– The throttle is not connected to the fluid air connection of the control unit.	– Connect the throttle to the fluid air connection of the control unit and readjust the fluid air volume.
Bad wrap around, back-spray	– Insufficient grounding	– Make sure that all components are well grounded, see Chapter 6.6 "Grounding".

Malfunction	Cause	Remedy
No powder feed	– Tank or powder tank empty	– Refill the powder.
	– The spray gun is clogged.	– Blow through the spray gun.
	– The powder feed hose is clogged.	– Blow through the powder feed hose.
	– The powder suction system in the powder tank is clogged.	– Blow through the powder suction system.
	– The feed air hose is bent.	– Straighten or replace the feed air hose.
	– The powder feed hose is kinked.	– Straighten or replace the powder feed hose.
The feed unit does not sink into the powder	– The guide of the feed unit holder is jammed.	– Enable the guide to move smoothly.

10 INSPECTIONS

If the system is used for electrostatic coating with flammable coating powders, testing should be undertaken in accordance with DIN EN 50050-2: 2014 as per Table 1.

Section	Type of inspection	Requirements	Inspection by	Type of inspection	Inspection interval
1	Ground leaking resistance from the work piece attachment point	The resistance to ground of every work piece's locating point must not exceed 1 MΩ (measurement voltage must be 1000 V). The form of construction of the work piece mount must guarantee that the work pieces remain grounded during coating.	SP	ME/CM Measure resistance to ground (work piece receiver - ground potential) max. 1 MΩ @ 1000 V.	weekly
2	Link between technical ventilation equipment and high voltage, compressed air and powder feed	The technical ventilation should be interlocked such that the powder feed and high voltage cannot be switched on, while the technical ventilation is not working effectively.	SP	FT Test whether the system is safely stopped and the powder feed, supply air, and high voltage are switched off when the ventilation is shut down.	annually
3	Checking the electrostatic manual coating system for damage	Electrostatic manual coating systems may only be operated in an undamaged condition. Damaged devices must be decommissioned immediately and repaired immediately.	SP	FT Inspect and test (e.g., by measurement) whether all parts carrying high voltage do not result in discharge which puts people at risk.	weekly

Legend:
MF = Manufacturer
ER = Employer
SP = Skilled person
FPO = Fire prevention officer
ELT = Electrician
TP = Trained person

FT = Function test
ME = Measurement
OC = Organization check
VI = Visual inspection
CM = Constant monitoring
TT = Technical testing

11 DISASSEMBLY AND DISPOSAL

11.1 DISASSEMBLY

⚠ WARNING

Incorrect disassembly!

Risk of injury and damage to the device.

→ Before starting disassembly:
- Switch off the energy and compressed air supply.
– Ensure that all system components are grounded.
– Secure system against being switched back on without authorization.

→ Observe the operating manuals when carrying out all work.



Procedure:

1. Switch off the system.
2. Pull the connection cable out of the socket.
3. Lock the compressed air supply and decompress system.
4. Separate the connection cable from the compressed air connection.
5. Separate the grounding cable from the signal ground.

11.2 DISPOSAL



NOTICE

Do not dispose of used electrical equipment with household refuse!

In accordance with European Directive 2012/19/EU on the disposal of used electrical equipment and its implementation in national law, this product may not be disposed of with the household refuse, but must be recycled in an environmentally correct manner.

WAGNER or one of our dealers will take back your used WAGNER electric or electronic equipment and will dispose of it for you in an environmentally-friendly way. Please contact one of our service points, one of our representatives or us directly to arrange this.

12 ACCESSORIES

12.1 FEED SYSTEM SN-2 550/10

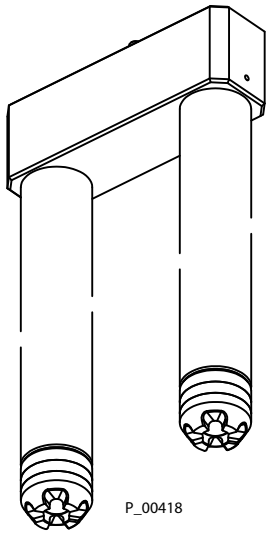

Order No.	Designation
265272	Feed system, SN-2 550/10

12.2 MAINTENANCE UNIT



Order No.	Designation
2314265	Maintenance unit
2314308	Filter cartridge (spare part)
2314309	Fine-filter cartridge (spare part)

12.3 QUICK COUPLING SET



P_01353

Order No.	Designation
2312543	Quick coupling set
935658	Compressed air hose ∅ 9.5 mm

12.4 ADAPTER PLATE SWITCHBOX

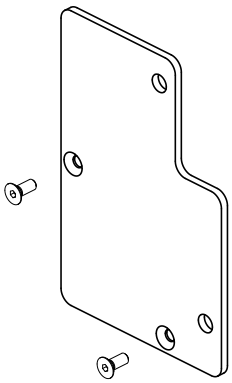

P_01158

Order No.	Designation
2308079	Adapter plate switchbox

12.5 SPRAY GUN SWITCHBOX



P_00670

Order No.	Designation
265911	Spray gun switchbox When alternately a Corona or a Tribo gun is operated
2313993	Hose (black, ∅ 4x6 mm)

12.5.1 INSTALLATION OF THE SWITCHBOX

⚠ WARNING

Danger from electric current!

Risk of injury and damage to the device.

→ Before starting with the installation of the switchbox, the manual system must be switched off and the mains plug disconnected.

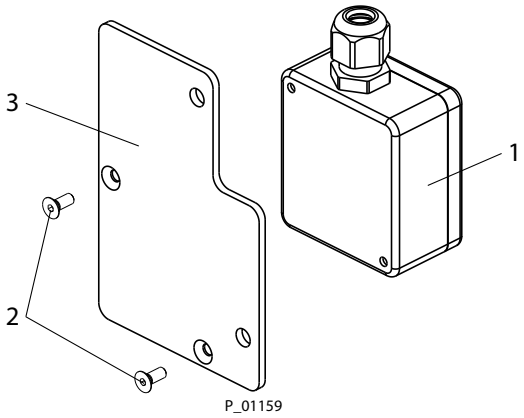

Procedure:

1. Screw switchbox (1) to adapter plate (3) with screws (2).

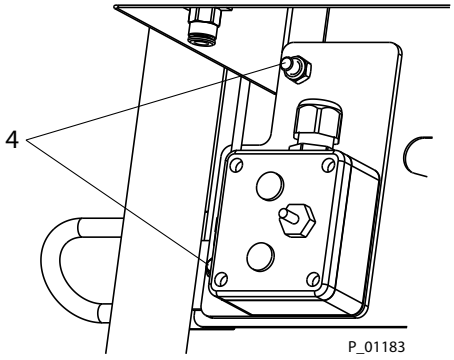

2. Use screws (4) to screw adapter plate with fitted switchbox onto the back side of trolley's front plate.

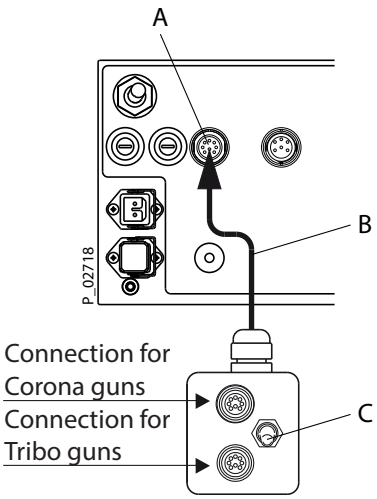

3. Pull the spray gun cable out of the socket (A) on the control unit.
4. Plug the switchbox's electrical cable (B) into the socket (A) on the control unit and secure it with the protective sleeve.
5. Connect the spray gun to the appropriate connection on the switchbox and secure it with the protective sleeve of the spray gun cable.
6. Set the switch (C) on the switchbox to the desired spray gun type.

12.5.2 SWITCHING THE GUN TYPES

Note:
Clean the powder residues from all powder-conveying parts thoroughly, before changing to another gun type.

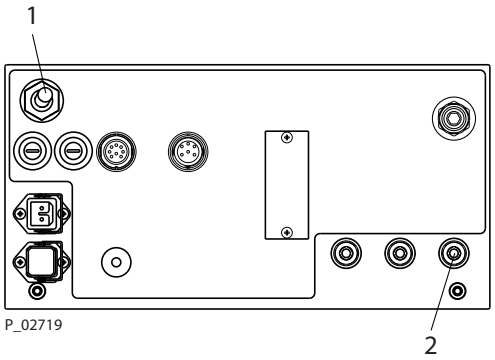

P_02719

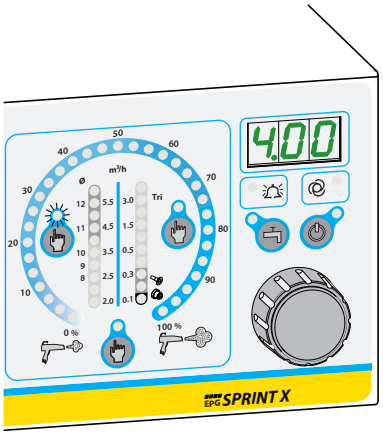

P_01785

Procedure:
(For example: switching from Corona to Tribo)

1. Switch off control unit with switch 1 on the rear or with "Standby" button 15 on the front.
2. Change the coating powder from Corona to Tribo.
3. Disconnect the hose (2) (transparent, atomizing air) from the Corona gun and connect it to the Tribo gun (Tribo air).
4. Disconnect the powder feed hose of the Corona spray gun from the powder injector and connect the Tribo gun hose to the powder injector.
5. Set the switch (C) on the switchbox to Tribo.
6. Switch on control unit with switch 1 on the rear or with "Standby" button 15 on the front.

Note:
Parameter C11, in the EPG-Sprint XE control unit device configuration, must be set to "aut". No gun is selected at first after the control unit is switched on. This will however be automatically selected and displayed after 1 second.

12.6 PEM-T3 MANUAL GUN

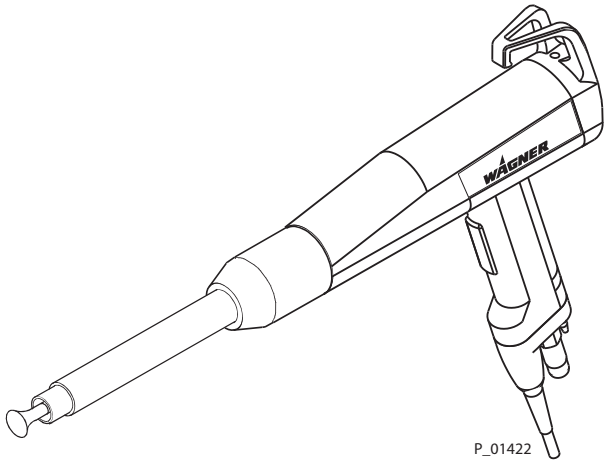

Order No.	Designation
351019	PEM-T3 Tribo manual gun

12.7 PEM-T3 EXTENSION

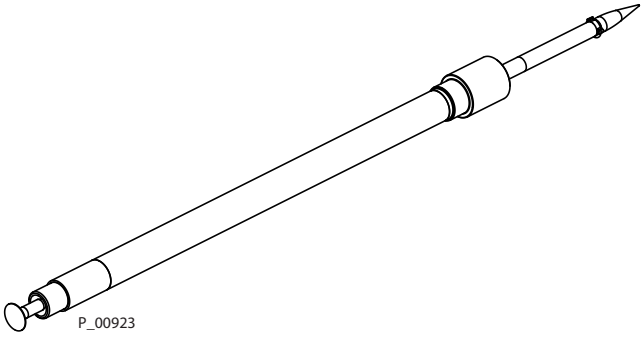

Order No.	Designation
260934	Nozzle extension, PEM-T3

12.8 RETROFIT SET, TRIBO LANCE TL1

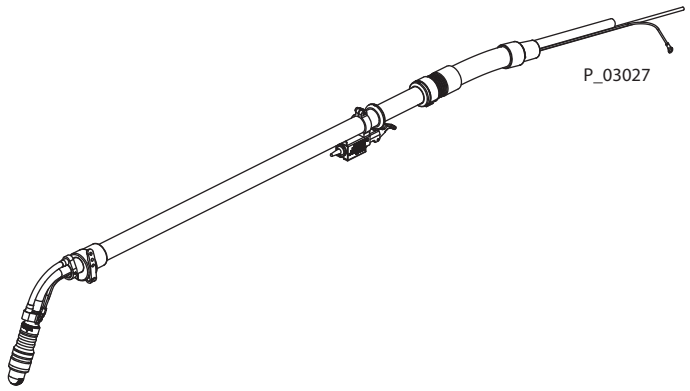

Order No.	Designation
2370544	Retrofit set, Tribo lance TL1-1000
2370545	Retrofit set, Tribo lance TL1-1800
2370546	Retrofit set, Tribo lance TL1-2800
2369617	Hose set, TL 1-8 m
2369618	Hose set, TL 1-12 m
2369619	Hose set, TL 1-16 m

12.9 SWIVEL CASTERS SET

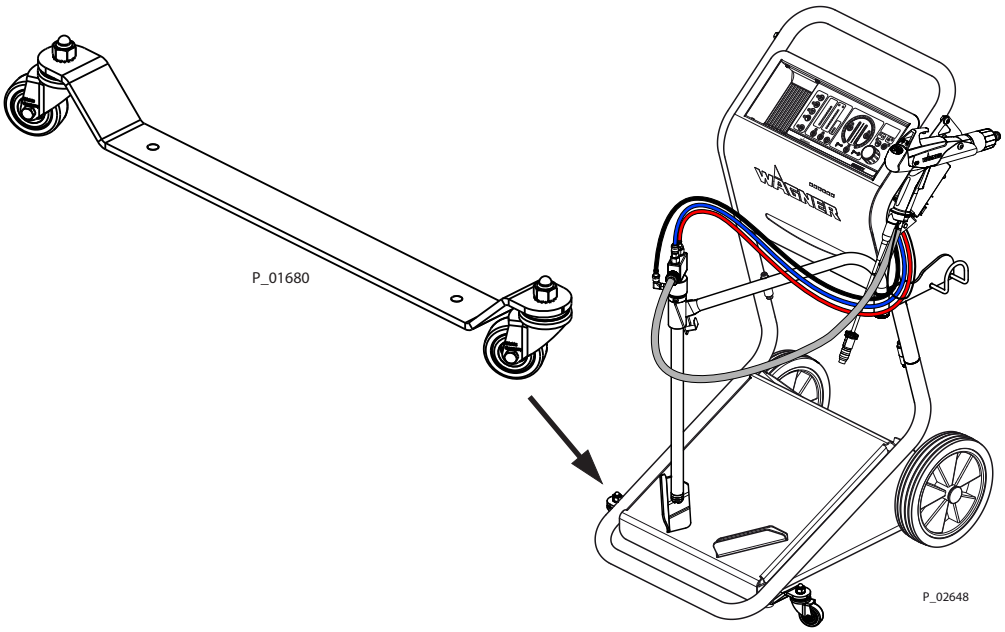

Order No.	Designation
2324869	Swivel casters set

12.10 POWDER HOSE

Order No.	Designation
351794	Powder hose ∅ 9 mm
2310699	Powder hose ∅ 10 mm
2307502	Powder hose ∅ 11 mm
2310700	Powder hose ∅ 12 mm

12.11 SPRINT DUAL MANUAL COATING SET

This accessory is used to operate two manual guns with the manual system.
The set consists of the control unit, the manual gun, a feed unit and different connecting parts and cables.

Order No.	Designation
2331417	Sprint dual manual coating set

12.12 WALL MOUNT

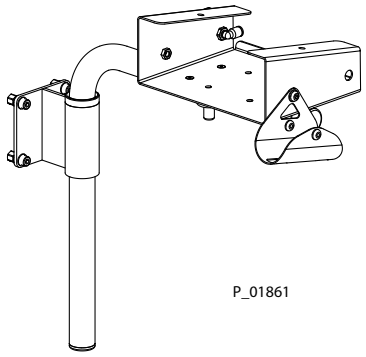

Order No.	Designation
2330223	Wall mount with bracket

12.13 CONVERSION SETS

When working with powders that are difficult to feed, the manual system can be converted into a variant with a 60L vibrator table.
When working with small components or small batches, the manual system can be converted into a variant with a 3L vibrator table.

Note:
The conversion sets have no FM approval!

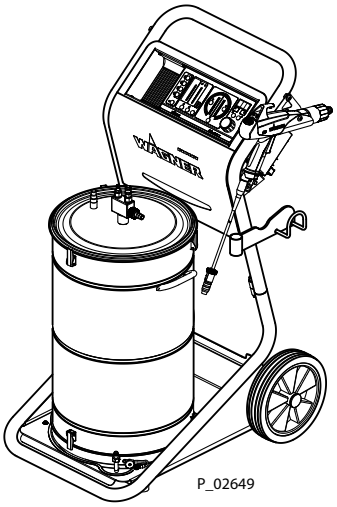

Sprint 60 L V

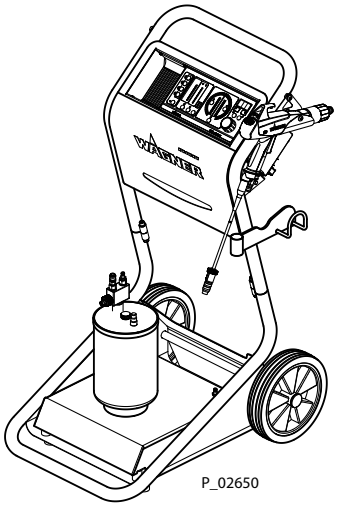

Sprint 3 L V

Order No.	Designation
2373856	Sprint XE 60L 230V/50Hz conversion set
2383231	Sprint XE 60L 115V/60Hz conversion set (USA/Japan)
2373883	Sprint XE 3L 230V/50Hz conversion set
2383232	Sprint XE 3L 115V/60Hz conversion set (USA/Japan)

12.14 RECIPE LABEL

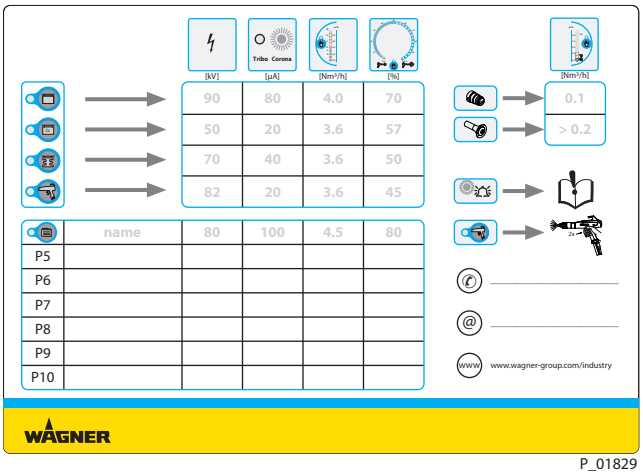

P_01829

Order No.	Designation
2331223	Recipe label

12.15 EXTENDED OPERATING MANUAL

If additional information regarding the individual components is desired, the operating manuals listed below can be resorted to.

This extended operating manual includes:

- important notes regarding connecting, commissioning and the operation (e.g., paint change) of the relevant components,
- the very important chapter "Maintenance and Cleaning" for the relevant components,
- troubleshooting and error correction for the relevant components,
- spare parts, wearing parts and accessories.

Description	Language	Order No.
EPG-Sprint XE control unit	German	2354911
	English	2354913
Powder injector, PI-F1	German	241890
	English	241891
HiCoat ED-Pump F powder injector	German	241885
	English	241886
PEM-X1 manual gun	German	2326019
	English	2326020
PEM-T3 manual gun	German	351708
	English	351709
Tribo lance, TL1	German	2371010
	English	2371011

13 SPARE PARTS

13.1 HOW TO ORDER SPARE PARTS?

Always supply the following information to ensure delivery of the right spare part:

Order number, designation and quantity

The quantity need not be the same as the number given in the quantity column "**Stk**" on the list. This number merely indicates how many of the respective parts are used in each component.
The following information is also required to ensure smooth processing of your order:

- Address for the invoice
- Address for delivery
- Name of the person to be contacted in the event of any queries
- Type of delivery (normal mail, express delivery, air freight, courier, etc.)

Identification in spare parts lists.

Explanation of column "**K**" (labeling) in the following spare parts lists:

◆ Wearing parts

Note: These parts are not covered by warranty terms.

● Not part of standard equipment, available, however, as additional extra.

⚠ DANGER

Incorrect maintenance/repair!

Danger to life and equipment damage.



→ Only a WAGNER service center or a suitably trained person may carry out repairs and replace parts.
→ Only repair and replace parts that are listed in the "Spare parts" chapter and that are assigned to the unit.
→ Before all work on the device and in the event of work interruptions:
- Switch off the energy and compressed air supply.
- Relieve spray gun and device pressure.
- Secure the spray gun against actuation.

→ Observe the operating and service manual for all work.

13.2 SPARE PARTS LIST OF SPRINT AIRFLUID XE MANUAL POWDER SYSTEM

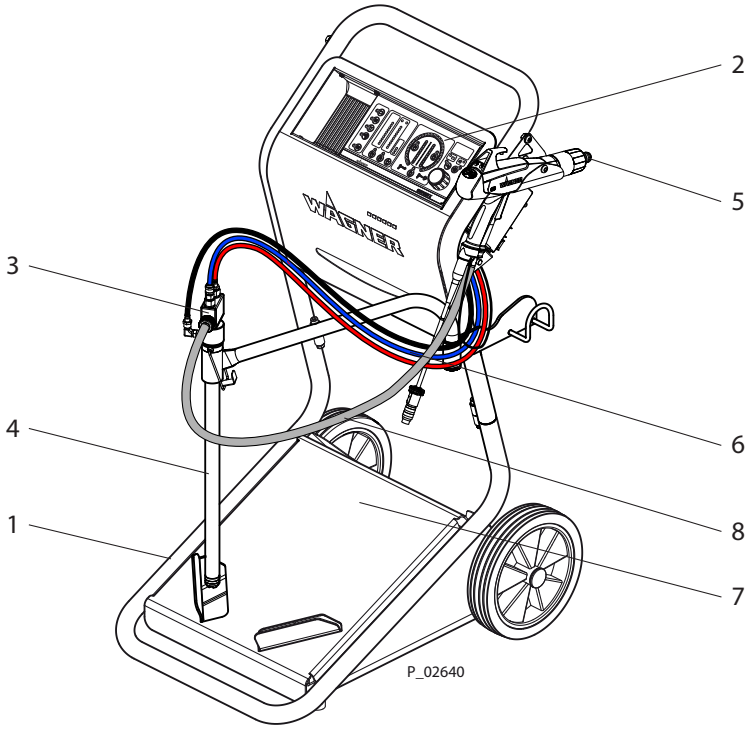

Pos	K	Stk	Order No.	Designation
			2355400	Sprint Airfluid XE manual system (standard version)
			2355402	Sprint Airfluid XE manual system (USA version)
			2355800	Sprint Airfluid XE manual system (Japanese version)
1		1	2355405	Airfluid XE trolley (standard version)
1		1	2356434	Airfluid XE trolley (US/Japanese version)
2		1	2353221 9951116	EPG-Sprint XE control unit Thermal delay fuse 2A (included in EPG-Sprint XE)
3		1	241622	Powder injector, PI-F1
4		1	265281	Intake tube, ST 550/10
5		1	2322587	PEM-X1 manual gun
6			2306401	Sprint connection parts
6/1		1	2303714	Sealing coupling with anti-kink spring
6/2		1.3 m	9982079	Hose, black ∅ 6 mm
6/3		1.3 m	700370	Hose, blue ∅ 8 mm
6/4		1	935973	Sealing coupling with anti-kink spring
6/5		1.3 m	2302060	Hose, red ∅ 8 mm
6/6		1	935974	Coupling plug with anti-kink spring
6/7		5	2327855	Velcro cable ties
7		1	2355337	Vibrator motor 230V/50Hz (standard version)
7		1	2355338	Vibrator motor 115V/60Hz (US/Japanese version)
8			265266	Powder hose set ∅ 11x5000 mm; 0.43x196.85 inches
9		1	130215	Grounding cable 10 m; 32.81 ft

10		1	241270	Mains cable (Europe)
10		1	264626	Mains cable (USA)
10		1	264625	Mains cable (Japan)
Not included in the scope of delivery, please order separately:				
11		1	2331976	Sprint round spray spare parts starter set
11		1	2349959	Sprint fan spray spare parts starter set

13.3 SPARE PARTS LIST OF SPRINT 60 L XE MANUAL POWDER SYSTEM TANK

(without vibration table)

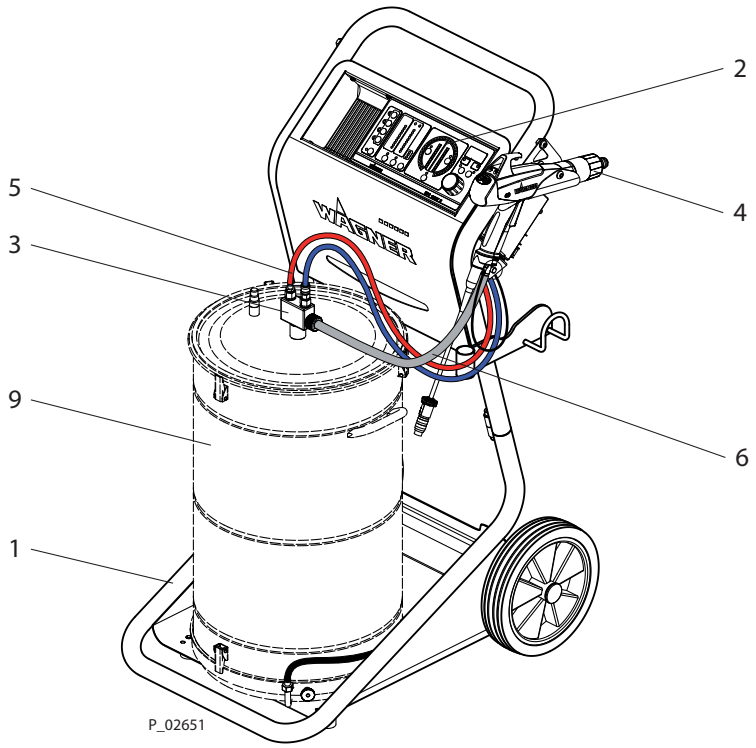

Pos	K	Stk	Order No.	Designation
			2355403	Sprint 60 L XE manual system (standard version)
			2355404	Sprint 60 L XE manual system (US version)
1		1	2355407	60 L XE trolley
2		1	2353221	EPG-Sprint XE control unit
			9951116	Thermal delay fuse 2A (included in EPG-Sprint XE)
3		1	241622	Powder injector, PI-F1
4		1	2322587	PEM-X1 manual gun
5			2306401	Sprint connection parts
5/1		1	2303714	Sealing coupling with anti-kink spring
5/2		1.3 m	9982079	Hose, black ∅ 6 mm
5/3		1.3 m	700370	Hose, blue ∅ 8 mm
5/4		1	935973	Sealing coupling with anti-kink spring
5/5		1.3 m	2302060	Hose, red ∅ 8 mm
5/6		1	935974	Coupling plug with anti-kink spring
5/7		5	2327855	Velcro cable ties
6			265266	Powder hose set ∅ 11x5000 mm; 0.43x196.85 inches
7		1	130215	Grounding cable 10 m; 32.81 ft
8		1	241270	Mains cable (Europe)
8		1	264626	Mains cable (USA)

Not included in the scope of delivery, please order separately:				
9		1	264268	Powder tank, 60 L
9		1	264224	Powder tank, 25 L
10		1	2331976	Sprint round spray spare parts starter set
10		1	2349959	Sprint fan spray spare parts starter set

13.4 TROLLEY SPARE PARTS

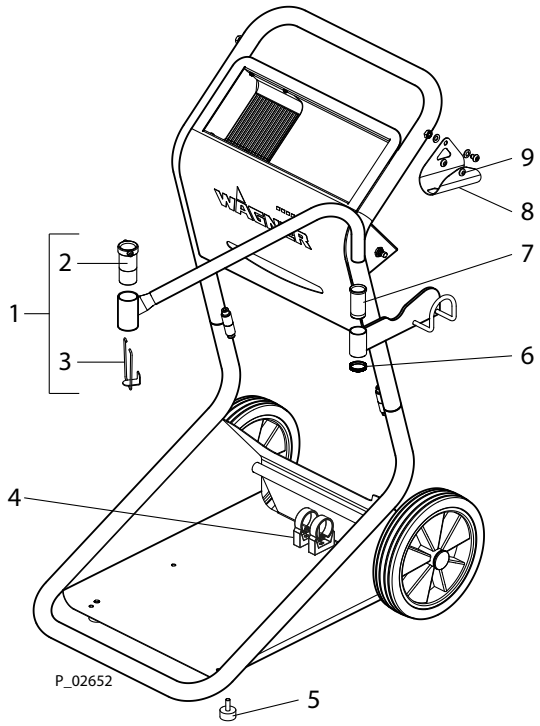

Pos	K	Stk	Order No.	Designation
1		1	2307117	Sprint injector bracket, complete
2	◆	1	2325026	intake tube bush
3		1	2325022	Retaining clamp
4		2	2362487	Pipe clamp (capacitor seat vibrator motor)
5		2	2305431	Adjustment foot
6		1	2305421	Nut
7	◆	1	2303279	Guide bush
8		1	2330599	Gun holder
9	◆	1	9950817	Cable entry grommet

◆ = Wearing parts

13.5 INTAKE TUBE, ST 550/10

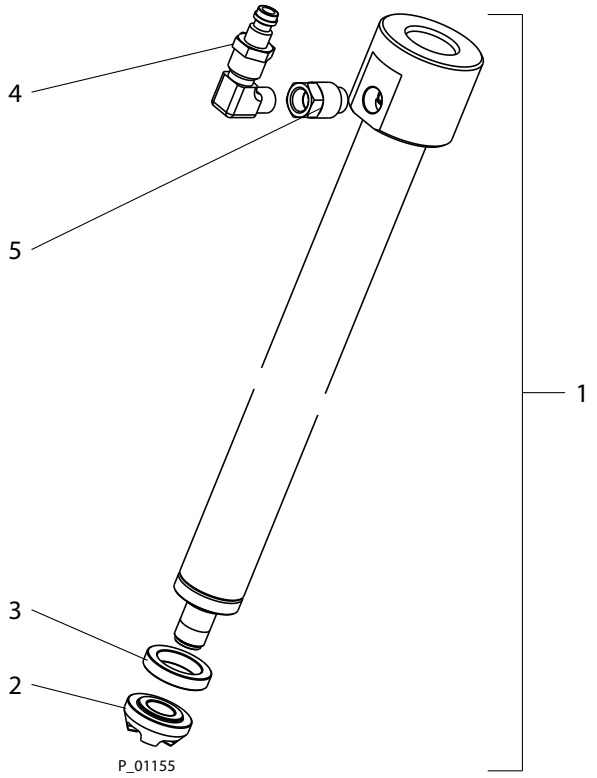

Pos	K	Stk	Order No.	Designation
1		1	265281	Intake tube, ST 550/10
2	◆	1	265401	Fluid crown
3	◆	1	265402	Fluid ring
4		1	2303716	Plug-in fitting, G1/8"
5		1	2307727	Extension

◆ = Wearing parts

13.6 FEED SYSTEM, SN-2 550/10

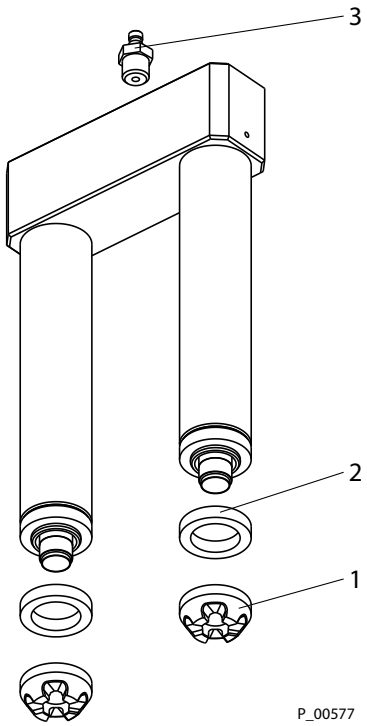

Pos	K	Stk	Order No.	Designation
			265272	Feed system, SN-2 550/10
1	◆	1	265401	Fluid crown
2	◆	1	265402	Fluid ring
3		1	9999047	Plug-in fitting, G1/8"

◆ = Wearing parts

13.7 COMPRESSED AIR SUPPLY

Rear view of the control unit

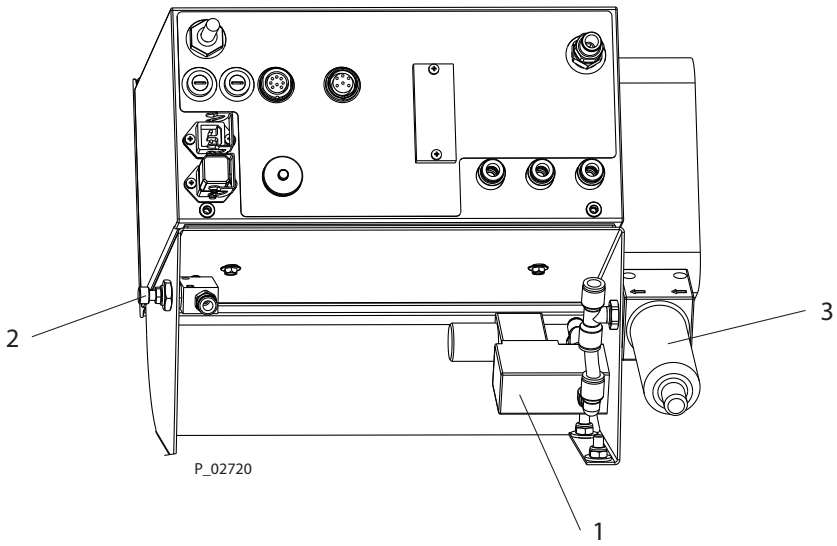

Pos	K	Stk	Order No.	Designation
1		1	2303294	Solenoid valve, 2/2 way
2		1	2304119	Fluid air throttle
3		1	2305860	Filter precipitator
			9981951	Compressed air connection hose, 18.5x12.5 mm

13.8 POWDER INJECTOR, PI-F1

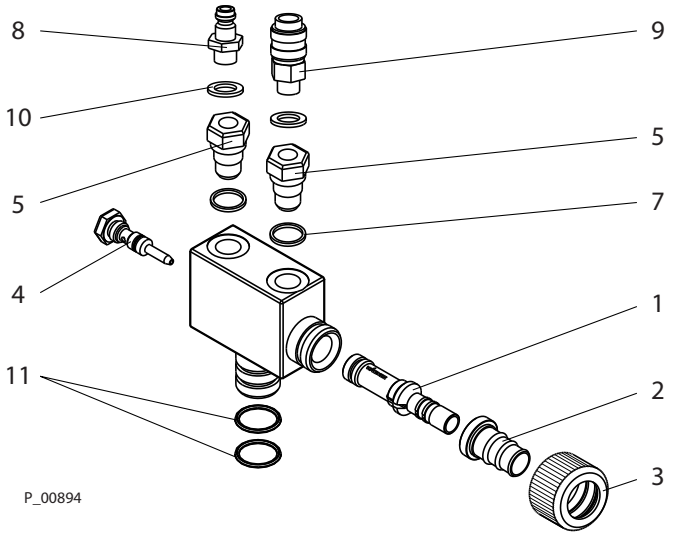

Pos	K	Stk	Order No.	Designation
			241622	Powder injector, PI-F1
1	◆	1	241225	Annular gap collector nozzle
2		1	241476	Hose sleeve
3		1	241466	Union nut
4	◆	1	241923	Air nozzle
5		2	241460	Spring check valve
7	◆	1	9970149	Sealing ring
8		1	9992709	Quick-release plug
9		1	9992710	Quick-release socket
10	◆	1	9970150	Sealing ring
11	◆	2	9974023	Sealing ring, electrically conductive

◆ = Wearing parts

13.9 HICOAT-ED PUMP F

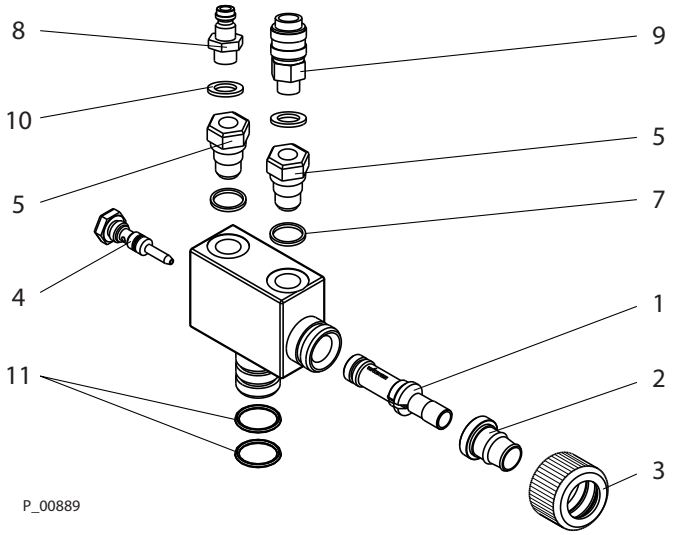

Pos	K	Stk	Order No.	Designation
			241624	HiCoat-ED pump F
1	◆	1	241229	Collector nozzle low air
2		1	241479	Hose sleeve
3		1	241466	Union nut
4	◆	1	241930	Air nozzle
5		2	241460	Spring check valve
7	◆	1	9970149	Sealing ring
8		1	9992709	Quick-release plug
9		1	9992710	Quick-release socket
10	◆	1	9970150	Sealing ring
11	◆	2	9974023	O-ring, electrically conductive

◆ = Wearing parts

13.10 60 L/25 L TANK

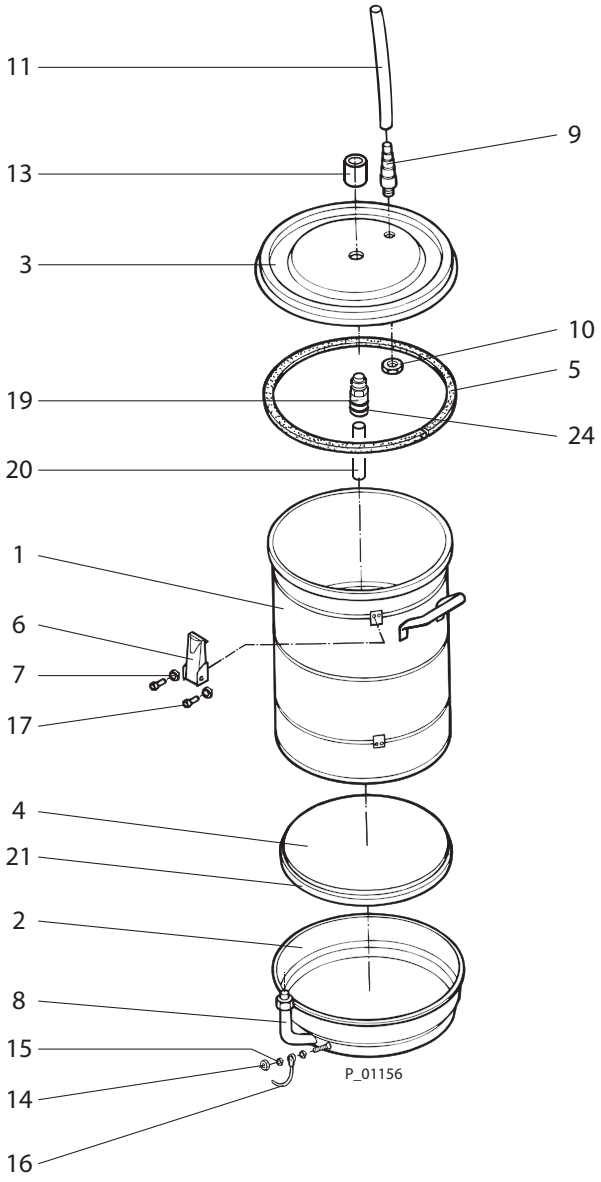

Pos	K	Stk	Order No.	Designation
1		1	264268	Powder tank, 60 L
1		1	264224	Powder tank, 25 L
2		1	264215	Base housing
3		1	264381	Lid
4	◆	1	264382	Fluidized bed
5	◆	1.10 m	9971527	Foam rubber seal
6		6	9994703	Spring clip
7		12	9900717	Socket cap screw
8		1	9992270	Quick coupling for screw-on connector
9		1	184336	Hose fitting
10		1	9910109	Hexagon nut
11			9982058	Exhaust hose, 17x3 mm
13		1	241372	Injector connection, complete
14		1	170533	Knurled nut
15		2	9920118	Washer
16		1	241276	Grounding cable, complete
17		12	9922102	Star washer
19		1	241376	Cable connection
20	◆	1	263357	Intake tube, 60 L
20	◆	1	264420	Intake tube, 25 L
21	◆	1.10 m	8324008	Base seal
24	◆	2	9971178	O-ring

◆ = Wearing parts

14 WEARING PARTS

	Order No.	Designation
 P_01664	2321976	Fan spray nozzle, X1, complete
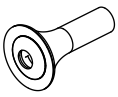 P_01665	2321981 2321980 2321171	Deflector cone ∅ 18 mm, complete Deflector cone ∅ 25 mm, complete Deflector cone ∅ 34 mm, complete
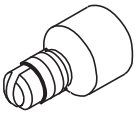 P_00696	260928	Fan spray nozzle for PEM-T3
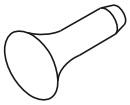 P_00697	259474	Deflector cone ∅ 22 mm for PEM-T3
 P_00723	265401	Fluid crown of suction unit
 P_00698	265402	Fluid ring of suction unit
 P_00699	241225	Clearance collector nozzle of PI-F1 Injector
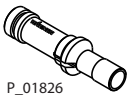 P_01826	241229	Collector nozzle ED pump

15 GUARANTEE AND CONFORMITY DECLARATIONS

15.1 IMPORTANT NOTES ON PRODUCT LIABILITY

As a result of an EC regulation effective from January 1, 1990, the manufacturer shall only be liable for his product if all parts originate from him or are approved by him, and if the devices are properly mounted, operated and maintained.
The manufacturer will not be held liable or will only be held partially liable if third-party accessories or spare parts have been used.
With genuine WAGNER accessories and spare parts, you have the guarantee that all safety regulations are complied with.

15.2 WARRANTY CLAIM

Full warranty is provided for this device:
We will at our discretion repair or replace free of charge all parts which within 24 months in single-shift, 12 months in 2-shift or 6 months in 3-shift operation from date of receipt by the purchaser are found to be wholly or substantially unusable due to causes prior to the sale, in particular faulty design, defective materials or poor workmanship.
The type of warranty provided is such that the device or individual components of the device are either replaced or repaired as we see fit. The resulting costs, in particular shipping charges, road tolls, labour and material costs will be borne by us except where these costs are increased due to the subsequent shipment of the device to a location other than the address of the purchaser.
We do not provide warranty for damage that has been caused or contributed to for the following reasons:
Unsuitable or improper use, faulty assembly or commissioning by the purchaser or a third party, normal wear, negligent handling, defective maintenance, unsuitable coating products, substitute products and the influence of chemical, electrochemical or electrical agents, except when the damage is attributable to us.
Components that have not been manufactured by WAGNER are subject to the original warranty of the manufacturer.
Replacement of a component does not extend the period of warranty of the device.
The device should be inspected immediately upon receipt. To avoid losing the warranty, we or the supplier company are to be informed in writing about obvious faults within 14 days upon receipt of the device.
We reserve the right to have the warranty compliance met by a contracting company.
The services provided by this warranty are dependent on evidence being provided in the form of an invoice or delivery note. If the examination discovers that no warranty claim exists, the costs of repairs are charged to the purchaser.
It is clearly stipulated that this warranty claim does not represent any constraint on statutory regulations or regulations agreed to contractually in our general terms and conditions.

Wagner International AG

15.3 EU DECLARATION OF CONFORMITY

15.3.1 EU DECLARATION OF CONFORMITY FOR TROLLEY

Herewith we declare that the supplied version of:

Airfluid XE trolley/60 L XE trolley

complies with the following guidelines:

2006/42/EC
2014/34/EU
2011/65/EC
2002/96/EC

Applied standards, in particular:

EN ISO 12100: 2010	EN 13463-5:2011
EN 1127-1:2011	EN 61010-1:2010
EN 60079-0:2012	EN 60204-1: 2006 +A1: 2009
EN 60079-31:2014	EN 61000-6-2: 2005
EN 13463-1:2009	EN 61000-6-4: 2007 +A1: 2011

Applied national technical standards and specifications, in particular:

BGI 764	

Identification: CE Ex II 3D Dc T100 °C

EU Declaration of Conformity
The EU Declaration of Conformity is enclosed with this product. If needed, further copies can be ordered through your WAGNER dealer by specifying the product name and serial number.

Order number: 2354822

15.3.2 EU DECLARATION OF CONFORMITY FOR CONTROL UNIT

Herewith we declare that the supplied version of:

EPG-SPRINT XE

complies with the following guidelines:

2014/34/EU
2004/108/EC
2011/65/EC
2002/96/EC

Applied standards, in particular:

EN 50050-2:2013	EN ISO 80079-34: 2011
EN 50177: 2009 +A1: 2012	EN ISO 13849-1: 2008
EN 1127-1:2011	EN 60529: 1991 +A1: 2000 +A2: 2013
EN 60079-0: 2012 +A11: 2013	EN ISO 12100: 2010
EN 60079-31:2014	EN 61000-6-2: 2005
EN 60204-1: 2006 +A1: 2009	EN 61000-6-4: 2007 +A1: 2011

Applied national technical standards and specifications, in particular:

BGI 764	

Identification: CE 0102 Ex II 3(2)D

EU Declaration of Conformity

The EU Declaration of Conformity is enclosed with this product. If needed, further copies can be ordered through your WAGNER dealer by specifying the product name and serial number.

Order number: 2327595

15.3.3 EU DECLARATION OF CONFORMITY FOR SPRAY GUNS

Herewith we declare that the supplied version of:

PEM-X1

complies with the following guidelines:

2014/34/EU
2006/42/EC
2004/108/EC
2011/65/EC
2002/96/EC

Applied standards, in particular:

pr EN 50050-2: 2011	EN 14462:2010
EN 50050:2007	EN 60529:2000
EN 1127-1:2011	EN ISO 12100: 2011
EN 60079-0:2010	EN 61000-6-2: 2011
EN 60079-7:2007	EN 61000-6-4: 2011
EN 60079-31:2010	EN 62061:2010
EN 1953:2010	EN ISO 13849-1: 2008
EN 60204-1:2007	EN 50177:2010
EN ISO 80079-34: 2012	

Applied national technical standards and specifications, in particular:

BGI 764	

Identification: CE 0102 Ex II 2D 2mJ

PTB 12 ATEX 5002

EN 50050-2:2012

EU Declaration of Conformity

The EU Declaration of Conformity is enclosed with this product. If needed, further copies can be ordered through your WAGNER dealer by specifying the product name and serial number.

Order number: 2326024

15.4 EC TYPE EXAMINATION CERTIFICATE

Physikalisch-Technische Bundesanstalt

Braunschweig und Berlin

EG-Baumusterprüfbescheinigung

(1)

(2) Geräte und Schutzsysteme zur bestimmungsgemäßen Verwendung in explosionsgefährdeten Bereichen - **Richtlinie 94/9/EG**

(3) EG-Baumusterprüfbescheinigungsnummer

PTB 12 ATEX 5001

(4) Gerät: Steuermodul EPG-Sprint X und Doppel-Steuermodul EPG S2 zur Steuerung elektrostatischer Pulversprüheinrichtungen der Typen PEM und PEA der Generationen C2, C3, C4, T3, T4, und X1.

(5) Hersteller: J. Wagner AG

(6) Anschrift: Industriestrasse 22, 9450 Altstätten, Schweiz

(7) Die Bauart dieses Gerätes sowie die verschiedenen zulässigen Ausführungen sind in der Anlage und den darin aufgeführten Unterlagen zu dieser Baumusterprüfbescheinigung festgelegt.

(8) Die Physikalisch-Technische Bundesanstalt bescheinigt als benannte Stelle Nr. 0102 nach Artikel 9 der Richtlinie des Rates der Europäischen Gemeinschaften vom 23. März 1994 (94/9/EG) die Erfüllung der grundlegenden Sicherheits- und Gesundheitsanforderungen für die Konzeption und den Bau von Geräten und Schutzsystemen zur bestimmungsgemäßen Verwendung in explosionsgefährdeten Bereichen gemäß Anhang II der Richtlinie.

Die Ergebnisse der Prüfung sind in dem vertraulichen Prüfbericht PTB Ex 12-51176 festgehalten.

(9) Die grundlegenden Sicherheits- und Gesundheitsanforderungen werden erfüllt durch Übereinstimmung mit

DIN EN 50050:2007, prEN 50050-2:2011, DIN EN 50177:2010

(10) Falls das Zeichen „X" hinter der Bescheinigungsnummer steht, wird auf besondere Bedingungen für die sichere Anwendung des Gerätes in der Anlage zu dieser Bescheinigung hingewiesen.

(11) Diese EG-Baumusterprüfbescheinigung bezieht sich nur auf Konzeption und Prüfung des festgelegten Gerätes gemäß Richtlinie 94/9/EG. Weitere Anforderungen dieser Richtlinie gelten für die Herstellung und das Inverkehrbringen dieses Gerätes. Diese Anforderungen werden nicht durch diese Bescheinigung abgedeckt.

(12) Die Kennzeichnung des Gerätes muss die folgenden Angaben enthalten:

II 3(2)D IP64 80°C

ZSEx10100d.dotm

Zertifizierungssektor Explosionsschutz
Im Auftrag

Dr.-Ing. M. Beyer
Direktor und Professor

Braunschweig, 6. August 2012

PHYSIKALISCH-TECHNISCHE BUNDESANSTALT 29

Seite 1/3

EG-Baumusterprüfbescheinigungen ohne Unterschrift und ohne Siegel haben keine Gültigkeit.
Diese EG-Baumusterprüfbescheinigung darf nur unverändert weiterverbreitet werden.
Auszüge oder Änderungen bedürfen der Genehmigung der Physikalisch-Technischen Bundesanstalt.

Physikalisch-Technische Bundesanstalt • Bundesallee 100 • 38116 Braunschweig • DEUTSCHLAND

Physikalisch-Technische Bundesanstalt

Braunschweig und Berlin

(1) EG-Baumusterprüfbescheinigung

(2) Geräte und Schutzsysteme zur bestimmungsgemäßen Verwendung in explosionsgefährdeten Bereichen - **Richtlinie 94/9/EG**

(3) EG-Baumusterprüfbescheinigungsnummer

PTB 12 ATEX 5002

(4) Gerät: Handgeführte elektrostatische Pulverbeschichtungspistole PEM-X1 und handgeführte elektrostatische Pulverbecherpistole PEM-X1 CG mit Zubehör.

(5) Hersteller: J. Wagner AG

(6) Anschrift: Industriestrasse 22, 9450 Altstätten, Schweiz

(7) Die Bauart dieses Gerätes sowie die verschiedenen zulässigen Ausführungen sind in der Anlage und den darin aufgeführten Unterlagen zu dieser Baumusterprüfbescheinigung festgelegt.

(8) Die Physikalisch-Technische Bundesanstalt bescheinigt als benannte Stelle Nr. 0102 nach Artikel 9 der Richtlinie des Rates der Europäischen Gemeinschaften vom 23. März 1994 (94/9/EG) die Erfüllung der grundlegenden Sicherheits- und Gesundheitsanforderungen für die Konzeption und den Bau von Geräten und Schutzsystemen zur bestimmungsgemäßen Verwendung in explosionsgefährdeten Bereichen gemäß Anhang II der Richtlinie.

Die Ergebnisse der Prüfung sind in dem vertraulichen Prüfbericht PTB Ex 12-51177 festgehalten.

(9) Die grundlegenden Sicherheits- und Gesundheitsanforderungen werden erfüllt durch Übereinstimmung mit

DIN EN 50050:2007, prEN 50050-2:2011, DIN EN 50177:2010

(10) Falls das Zeichen „X" hinter der Bescheinigungsnummer steht, wird auf besondere Bedingungen für die sichere Anwendung des Gerätes in der Anlage zu dieser Bescheinigung hingewiesen.

(11) Diese EG-Baumusterprüfbescheinigung bezieht sich nur auf Konzeption und Prüfung des festgelegten Gerätes gemäß Richtlinie 94/9/EG. Weitere Anforderungen dieser Richtlinie gelten für die Herstellung und das Inverkehrbringen dieses Gerätes. Diese Anforderungen werden nicht durch diese Bescheinigung abgedeckt.

(12) Die Kennzeichnung des Gerätes muss die folgenden Angaben enthalten:

Ex II 2D 2mJ

ZSEx10100d.dotm

Zertifizierungssektor Explosionsschutz
Im Auftrag

Dr.-Ing. M. Beyer
Direktor und Professor

Braunschweig, 6. August 2012

PHYSIKALISCH-TECHNISCHE BUNDESANSTALT

Seite 1/3

EG-Baumusterprüfbescheinigungen ohne Unterschrift und ohne Siegel haben keine Gültigkeit.
Diese EG-Baumusterprüfbescheinigung darf nur unverändert weiterverbreitet werden.
Auszüge oder Änderungen bedürfen der Genehmigung der Physikalisch-Technischen Bundesanstalt.
Physikalisch-Technische Bundesanstalt • Bundesallee 100 • 38116 Braunschweig • DEUTSCHLAND

15.5 FM APPROVAL

The Sprint manual system is FM approved in the USA and Canada using the configuration drawing no. 2309729.



CET
DISTRIBUTED BY COATING EQUIPTMENT TECHNOLOGY,INC
store.cetinc.com • (586) 210-0555

WAGNER

DIN ISO 9001 WAGNER CERTIFIED

Order No. 2354920
Version 05/2017

Germany
J. WAGNER GmbH
Otto-Lilienthal-Str. 18
Postfach 1120
88677 **Markdorf**
Phone +49/ (0)7544 / 5050
Telefax +49/ (0)7544 / 505200
E-mail ts-powder@wagner-group.com

Switzerland
Wagner International AG
Industriestrasse 22
9450 **Altstätten**
Phone +41/ (0)71 / 757 2211
Telefax +41/ (0)71 / 757 2222

More contact addresses:
www.wagner-group.com

Subject to changes without notice

Document No. 11169083
Version A